INFORMATION HANDOUT
ET Plus Replacement Options

MANUFACTURER'S DRAWINGS AND SPECIFICATIONS

TYPE SKT TERMINAL SYSTEM

Complete Installation Manual at:

http://roadsystems.com/skt.html

TYPE FLEAT TERMINAL SYSTEM

(Requires additional space between ETW and Hinge due to Flare)

Complete Installation Manual at: http://roadsystems.com/fleat.html

TYPE X-LITE and X-TENSION TERMINAL SYSTEM

Complete Installation Manual at:

http://www.barriersystemsinc.com/xlite-end-terminal

http://www.barriersystemsinc.com/xtension-guardrail-end-treatment

DISCLAIMER
CONSULT MANUFACTURERS COMPLETE INSTALLATION MANUALS on their websites FOR MAINTENACE AND CONSTRUCTION INSTALLATION

Compiled by TR BUCKO
12/2014

Installation Instructions

for the

SKT 350

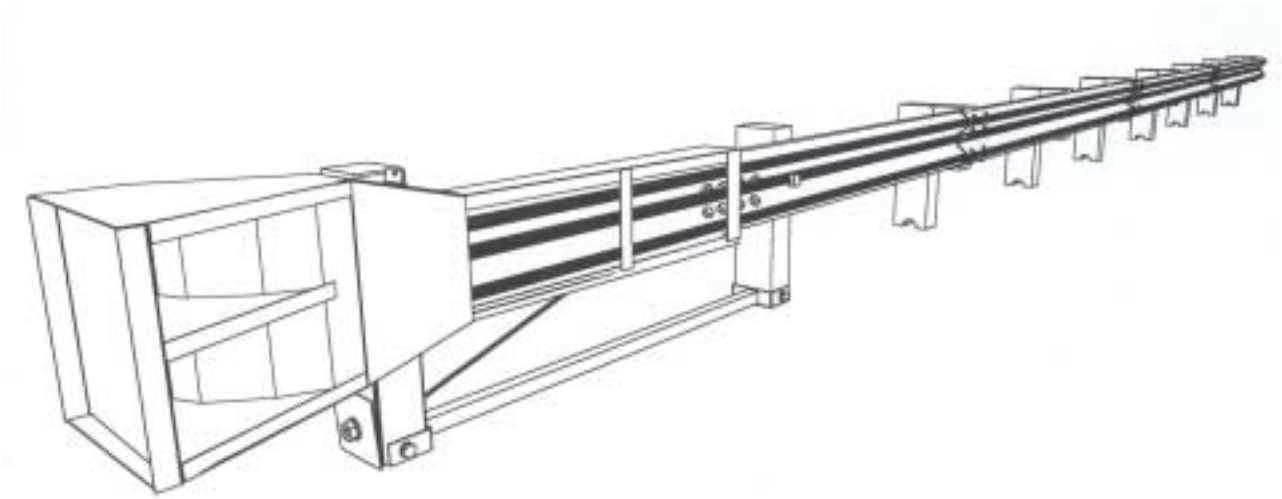

R O A D S Y S T E M S , I N C.

P. O. Box 2163

Big Spring, Texas 79721

Phone: (432) 263-2435 FAX: (432) 267-4039

Technical Support & Marketing Phone: (330) 346-0721

Technical Support & Marketing Fax: (330) 346-0722

This Installation Manual can be downloaded from RSI web site
www.roadsystems.com

ADDENDUM ..... March 2001

This SKT Installation Manual contains options for the allowable number of steel foundation tubes. See Table 1 on page 3.

Either 2-tube, 4-tube, or 8-tube options are acceptable and normally, the specifying agency will indicate which option will be used. When more than 2 foundation tubes are used, tubes 3 & 4 or tubes 3 through 8 must be the short tube 4'-6" long as shown in Figure 5 on page 11.

It is now permissible to eliminate the soil plates from the tubes used at posts 3 and higher provided it is approved by the specifying agency. The foundation tubes used at posts 1 & 2 must use the soil plate if the 4'-6" long tube is used.

If the 6'-0" long foundation tube (Figure 8, page 15) is used at posts 1 & 2, soil plates are not required.

Table of Contents

Page

LIST OF FIGURES ii

LIST OF TABLES iii

Installing the *SKT 350* 3

Materials 3
Design Options 3
Site Preparation 7
Tools Required 7
Installation Procedures 7
Installing Posts 3 through 8 7
Installing Posts 1 and 2 with Groundline Strut 13
Installing Guardrail 16
Installing Cable Anchor Bracket 16
Installing ***SKT 350*** Impact Head 18
Installing Cable Assembly 18
SKT 350 Installation Checklist 19

Repairing the *SKT 350* 20

Equipment Needed for Repair Operation 20
General Repair Procedures 20
Procedures Immediately Following an Accident (Temporary) 21

NOTE: The SKT 350 has different foundation tube options available. Where reference is made to a *5'-0" long foundation tube* with soil plate, a *4'-6" long foundation tube* with soil plate is an acceptable alternate.

See the inside cover for additional information on soil plate options.

PUBLICATION ~ 020105

List of Figures

Figure		Page
1	Isometric View of the ***SKT 350*** (Two Foundation Tube Option)	1
2	Plan & Elevation View of the ***SKT 350*** (Two Foundation Tube Option)	2
3	Optional Flared Installation	8
4	Section at CRT Post	10
5	Section at Posts with 5'-0" or 4'-6" Foundation Tubes with Soil Plates	11
6	Proper Placement of Foundation Tubes	12
7	Above-Ground Details at Post Locations 1 and 2	14
8	Section at Post Locations 1 and 2	15
9	Installation of Cable Anchor Bracket Shoulder Bolts	17
10	Installation of Cable Anchor Bracket	17
11	Chain Attachment to Remove Impact Head	22
12	Wood Post Pulling Tool (Pipe Option)	22
13	Wood Post Pulling Tool (Lag Screw Option)	22

List of Tables

Table		Page
1	***SKT 350*** Design Options	3
2	***SKT 350*** Bill of Materials - Two Foundation Tube Option	4
3	***SKT 350*** Bill of Materials - Four Foundation Tube Option	5
4	***SKT 350*** Bill of Materials - Eight Foundation Tube Option	6

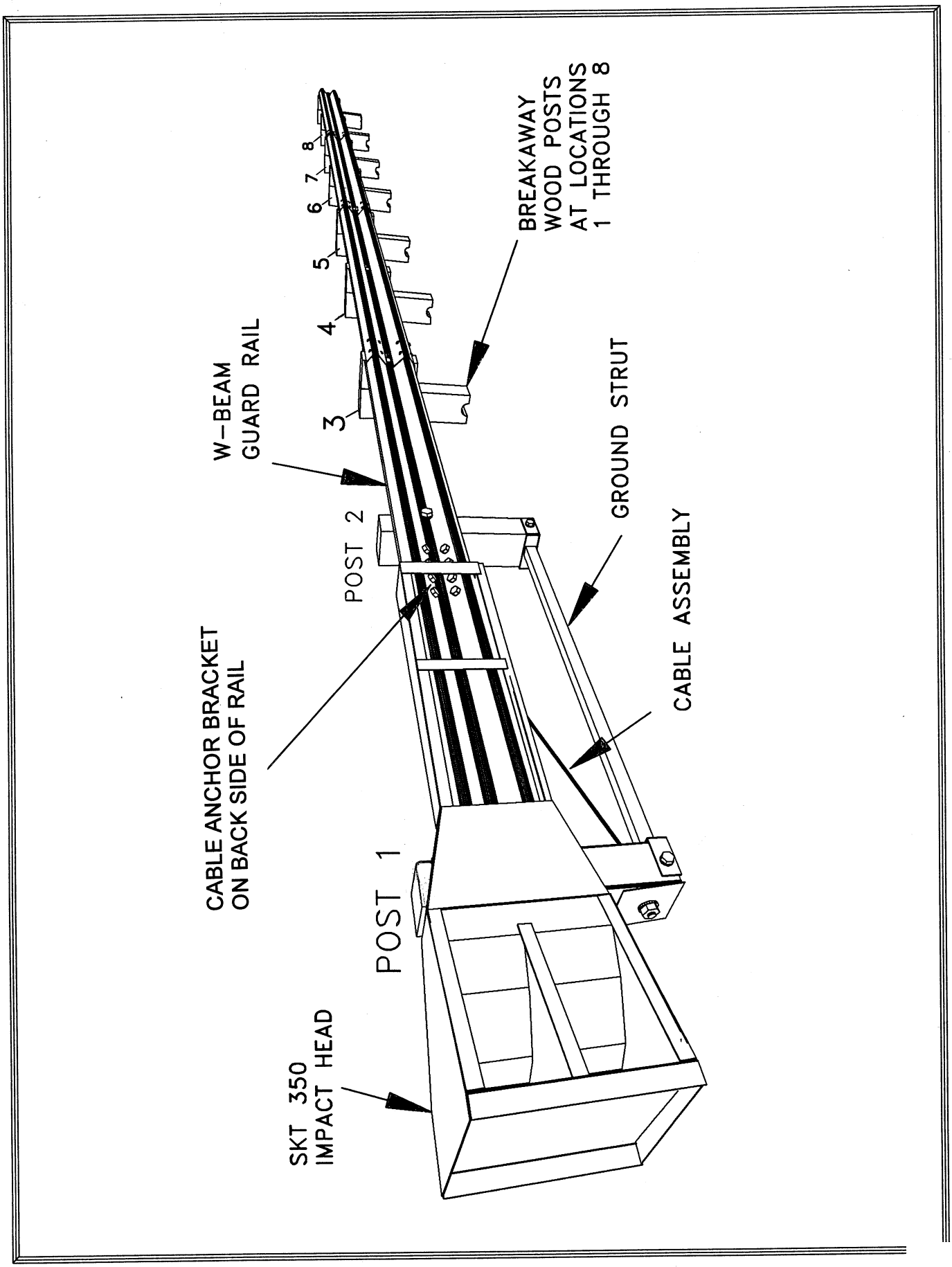

Figure 1. Isometric view of the *SKT 350*.

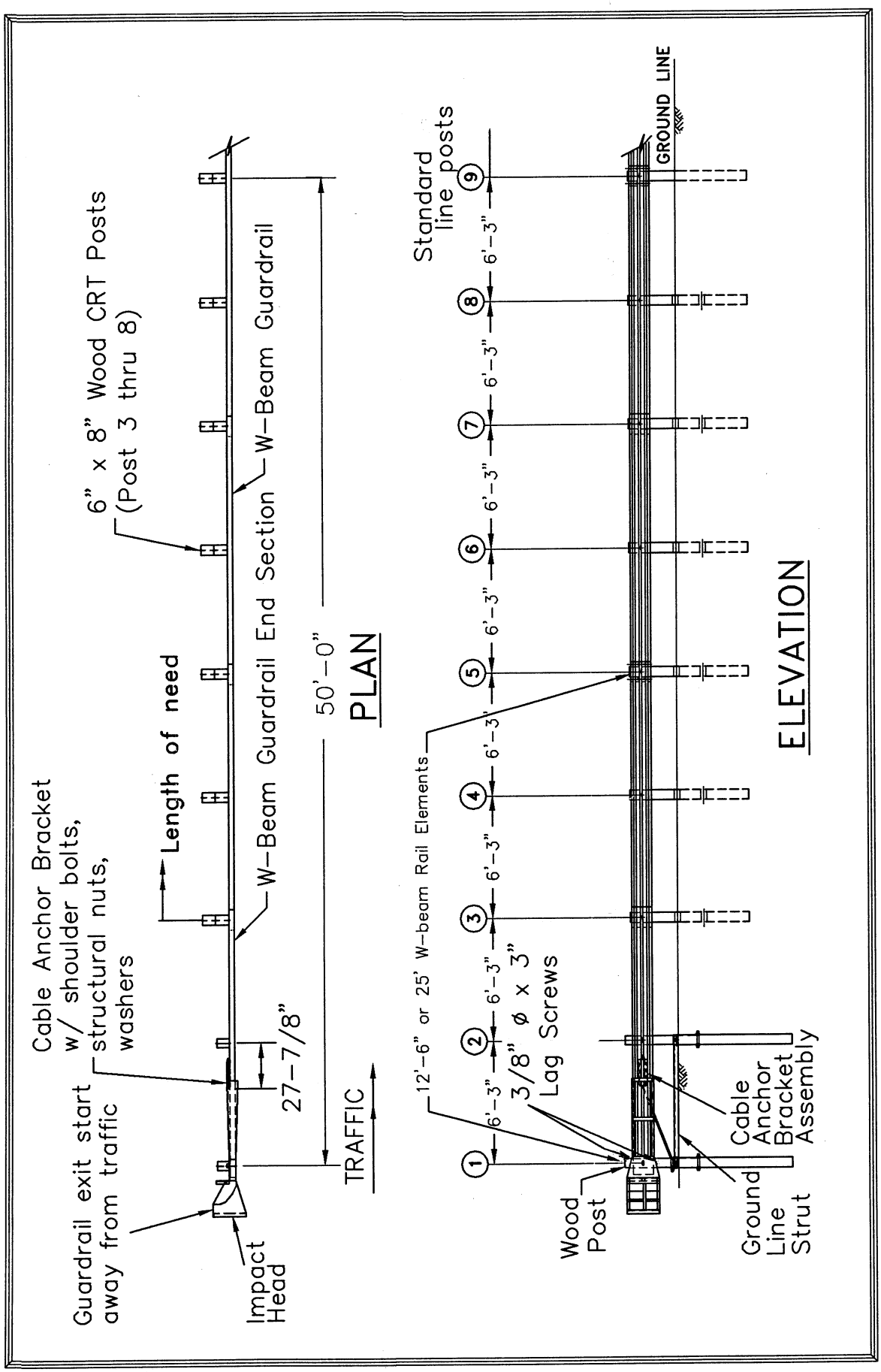

Figure 2. Plan and Elevation Views of *SKT 350*.
(TWO Foundation Tube Option)

Installing the *SKT 350*

Materials

As packaged, the ***SKT 350*** system includes all materials needed for a complete installation except for the impact face object marker. The length of the system in this configuration is 50'-0".

Design Options

Design options with 2, 4 or 8 foundation tubes are available as shown in **Table 1**. In addition for posts #1 and #2, the optional 6'-0" long split foundation tubes may be substituted with solid 6'-0" long foundation tubes without soil plates, standard 5'-0" or 4'-6" long foundation tubes with soil plates.

Table 1. *SKT 350* Design Options

SKT 350 **Design Options**	*No. of Optional 6'-0" Split Foundation Tubes with No Soil Plate	No. of Standard Foundation Tubes with a Soil Plate	No. of CRT Posts	Total No. of Posts
2 Foundation Tubes	2	0	6	8
4 Foundation Tubes	2	2	4	8
8 Foundation Tubes	2	6	0	8

***Note.** The optional 6'-0" long split foundation tubes may be substituted with solid 6'-0" long foundation tubes without soil plates, standard 5'-0" or 4'-6" long foundation tubes with soil plates.

Figure 1 shows the isometric view and **Figure 2** shows the plan and elevation views of the ***SKT 350*** for the TWO foundation tube option.

The bills of materials for the three design options are shown in **Tables 2 through 4**, respectively.

Table 2. *SKT 350* Bill of Materials - TWO Foundation Tube Option

Code #	Quantity	Description
S3000	1	Impact Head
S1303/S1305	1	W-Beam Guardrail End Section, 12 Ga., 12-6" or 25'-0"
G1203/G1205	3/1	W-Beam Guardrail, 12 Ga., 12'-6" or 25'-0"
S730	2	* Foundation Soil Tubes, 6" x 8" x 6'-0" **(SEE NOTE BELOW)**
E740	1	Pipe Sleeve - 2″ Standard Pipe x 5-1/2″
E750	1	Bearing Plate - 8″ x 8″ x 5/8″
S760	1	Cable Anchor Bracket
E770	1	BCT Cable Anchor Assembly
E780	1	Ground Strut
P650	2	5-1/2″ x 7-1/2″ x 45″ Wood Posts
P671	6	6" x 8" x 6'-0" Wood CRT Posts
P675	6	6" x 8" x 14" Timber Blockouts
E3151	1	Impact Face Object Marker (Not Provided)
Hardware	* The optional **6'-0" long split** foundation tubes may be substituted with either **solid 6'-0" long** foundation tubes without soil plates, standard **5'-0" long** or **4'-6" long** foundation tubes with soil plates.	
B580122	16/32	5/8″ x 1¼″ Splice Bolts
B580754	2	5/8″ x 7½″ Hex Bolts
B581004	2	5/8″ x 10″ Hex Bolts
B581002	1	5/8″ x 10″ H.G.R. Post Bolt (Post 2 Only / NO BOLT USED AT POST #1)
B581802	6	5/8″ x 18" H.G.R. Post Bolts (Posts 3 through 8)
N050	27/43	5/8″ H.G.R. Nuts (Splice - 16/32, Soil Tubes - 4, Posts 2 to 8 - 7)
W050	11	5/8″ Flat Washers (2 each at Soil Tubes + 7 Posts)
N100	2	1″ Anchor Cable Hex Nuts
W100	2	1″ Anchor Cable Washers
E350	2	3/8″ x 3″ Lag Screws
SB58A	8	Cable Anchor Bracket Shoulder Bolts
N055A	8	1/2" A325 Structural Nuts
W050A	16	1-1/16" OD x 9/16" ID A325 Structural Washers

Table 3. *SKT 350* Bill of Materials - FOUR Foundation Tube Option

Code #	Quantity	Description
S3000	1	Impact Head
S1303/S1305	1	W-Beam Guardrail End Section, 12 Ga., 12'-6" or 25'-0"
G1203/G1205	3/1	W-Beam Guardrail, 12 Ga., 12'-6" or 25'-0"
S730	2	* Foundation Soil Tubes, 6" x 8" x 6'-0" **(SEE NOTE BELOW)**
S735	2	Foundation Soil Tubes, 6" x 8" x 5'-0" **(SEE NOTE BELOW)**
SP600	2	Soil Plates - 24" x 18" x 1/4" **(SEE NOTE BELOW)**
E740	1	Pipe Sleeve - 2″ Standard Pipe x 5-1/2″
E750	1	Bearing Plate - 8″ x 8″ x 5/8″
S760	1	Cable Anchor Bracket
E770	1	BCT Cable Anchor Assembly
E780	1	Ground Strut
P650	4	5-1/2″ x 7-1/2″ x 45″ Wood Posts
P671	4	6" x 8" x 6'-0" Wood CRT Posts
P675	6	6" x 8" x 14" Timber Blockouts
E3151	1	Impact Face Object Marker (Not Provided)
Hardware	* The optional **6'-0" long split** foundation tubes may be substituted with either **solid 6'-0" long** foundation tubes without soil plates, standard **5'-0" long** or **4'-6" long** foundation tubes with soil plates	
B580122	16/32	5/8″ x 1¼″ Splice Bolts
B580754	6	5/8″ x 7½″ Hex Bolts
B581004	4	5/8″ x 10″ Hex Bolts
B581002	1	5/8″ x 10″ H.G.R. Post Bolt (Post 2 Only / NO BOLT USED AT POST #1)
B581802	6	5/8″ x 18" H.G.R. Post Bolts (Posts 3 through 8)
N050	33/49	5/8″ H.G.R. Nuts (Splice - 16/32, Soil Tubes - 10, Posts 2 to 8 - 7)
W050	15	5/8″ Flat Washers (2 each at Soil Tubes + 7 Posts)
N100	2	1″ Anchor Cable Hex Nuts
W100	2	1″ Anchor Cable Washers
E350	2	3/8″ x 3″ Lag Screws
SB58A	8	Cable Anchor Bracket Shoulder Bolts
N055A	8	½" A325 Structural Nuts
W050A	16	1-1/16" OD x 9/16" ID A325 Structural Washers

Table 4. *SKT 350* Bill of Materials - EIGHT Foundation Tube Option

Code #	Quantity	Description
S3000	1	Impact Head
S1303/S1305	1	W-Beam Guardrail End Section, 12 Ga., 12'-6" or 25'-0"
G1203/G1205	3/1	W-Beam Guardrail, 12 Ga., 12'-6" or 25'-0"
S730	2	* Foundation Soil Tubes, 6" x 8" x 6'-0" **(SEE NOTE BELOW)**
S735	6	Foundation Soil Tubes, 6" x 8" x 5'-0" **(SEE NOTE BELOW)**
SP600	6	Soil Plates - 24" x 18" x 1/4" **(SEE NOTE BELOW)**
E740	1	Pipe Sleeve - 2″ Standard Pipe x 5-1/2″
E750	1	Bearing Plate - 8″ x 8″ x 5/8"
S760	1	Cable Anchor Bracket
E770	1	BCT Cable Anchor Assembly
E780	1	Ground Strut
P650	8	5-1/2″ x 7-1/2″ x 45″ Wood Posts
P675	6	6" x 8" x 14" Timber Blockouts
E3151	1	Impact Face Object Marker (Not Provided)
Hardware	* The optional **6'-0" long split** foundation tubes may be substituted with either **solid 6'-0" long** foundation tubes without soil plates, standard **5'-0" long** or **4'-6" long** foundation tubes with soil plates.	
B580122	16/32	5/8″ x 1¼″ Splice Bolts
B580754	14	5/8″ x 7½″ Hex Bolts
B581004	8	5/8″ x 10″ Hex Bolts
B581002	1	5/8″ x 10″ H.G.R. Post Bolt (Post 2 Only / NO BOLT USED AT POST #1)
B581802	6	5/8″ x 18" H.G.R. Post Bolts (Posts 3 through 8)
N050	45/61	5/8″ H.G.R. Nuts (Splice - 16/32, Soil Tubes - 22, Posts 2 to 8 - 7)
W050	23	5/8″ Flat Washers (2 each at Soil Tubes + 7 Posts)
N100	2	1″ Anchor Cable Hex Nuts
W100	2	1″ Anchor Cable Washers
E350	2	3/8″ x 3″ Lag Screws
SB58A	8	Cable Anchor Bracket Shoulder Bolts
N055A	8	½" A325 Structural Nuts
W050A	16	1-1/16" OD x 9/16" ID A325 Structural Washers

Site Preparation

When the guardrail is installed parallel to the edge of the shoulder, a 50:1 flare away from the roadway is recommended so the impact head will not encroach on the shoulder. However, the flare is not required and may be decreased or eliminated for specific applications. When necessary, a 25:1 flare rate can be used over a distance of 25'-0" or 50'-0", as shown in **Figure 3**. Minor site grading may be necessary for installations placed beyond the edge of the shoulder to prevent the foundation tubes from extending more than 4″ above the ground (see Section on Installation).

Tools Required

The tools required for installation of the ***SKT 350*** system are those used to install standard highway guardrails (H.G.R.), including: 9/16", 7/8", 15/16", 1-1/4", and 1-1/2" sockets and wrenches, a drill with a 1/4″ bit, and other equipment such as augers, tampers, and post pounders commonly used in driving posts.

Installation Procedures

Begin installation at the downstream end of the ***SKT 350*** (post location 9) to ensure that the terminal matches up with the standard section of guardrail. The major steps in the installation of the ***SKT 350*** are as follows:

- Install posts 3 through 8,
- Install posts 1 and 2 with groundline strut,
- Install guardrail,
- Install cable anchor bracket,
- Install the ***SKT 350*** impact head, and
- Install cable assembly.

NOTE: Foundation tubes must be used at **Posts #1 and #2**. Those tubes may be either 6'-0" long split tubes (S730) without soil plates, 6'-0" long solid tubes (E731) without soil plates, 5'-0" long tubes (S735) with soil plates (SP600), or 4'-6" long tubes (E735) with soil plates (SP600). **Posts # 3 through 8** may be either CRT wood posts without foundation tubes or short wood posts inside a 5'-0" or 4'-6" long foundation tube with soil plates.

Installing Posts 3 Through 8

For the **two foundation tube option**, posts 3 through 8 are 6" x 8" x 6'-0" CRT posts (P671). When installed properly, the hole at the ground line of these CRT posts will be parallel to the roadway.

For the **four foundation tube option**, posts 3 and 4 are inserted in foundation tubes with soil plates (SP600). Install the 5-1/2″ x 7-1/2″ x 45" wood posts (P650) in the foundation tubes at the post 3 and 4 locations. Secure the post to each foundation tube with a 5/8″ x 10″ hex head bolt (B581004) and H.G.R. nut (N050) with a washer (W050) under both the bolt head and the nut. *Do not over tighten and deform the tubes.* Posts 5 through 8 are 6" x 8" x 6'-0" CRT posts (P671).

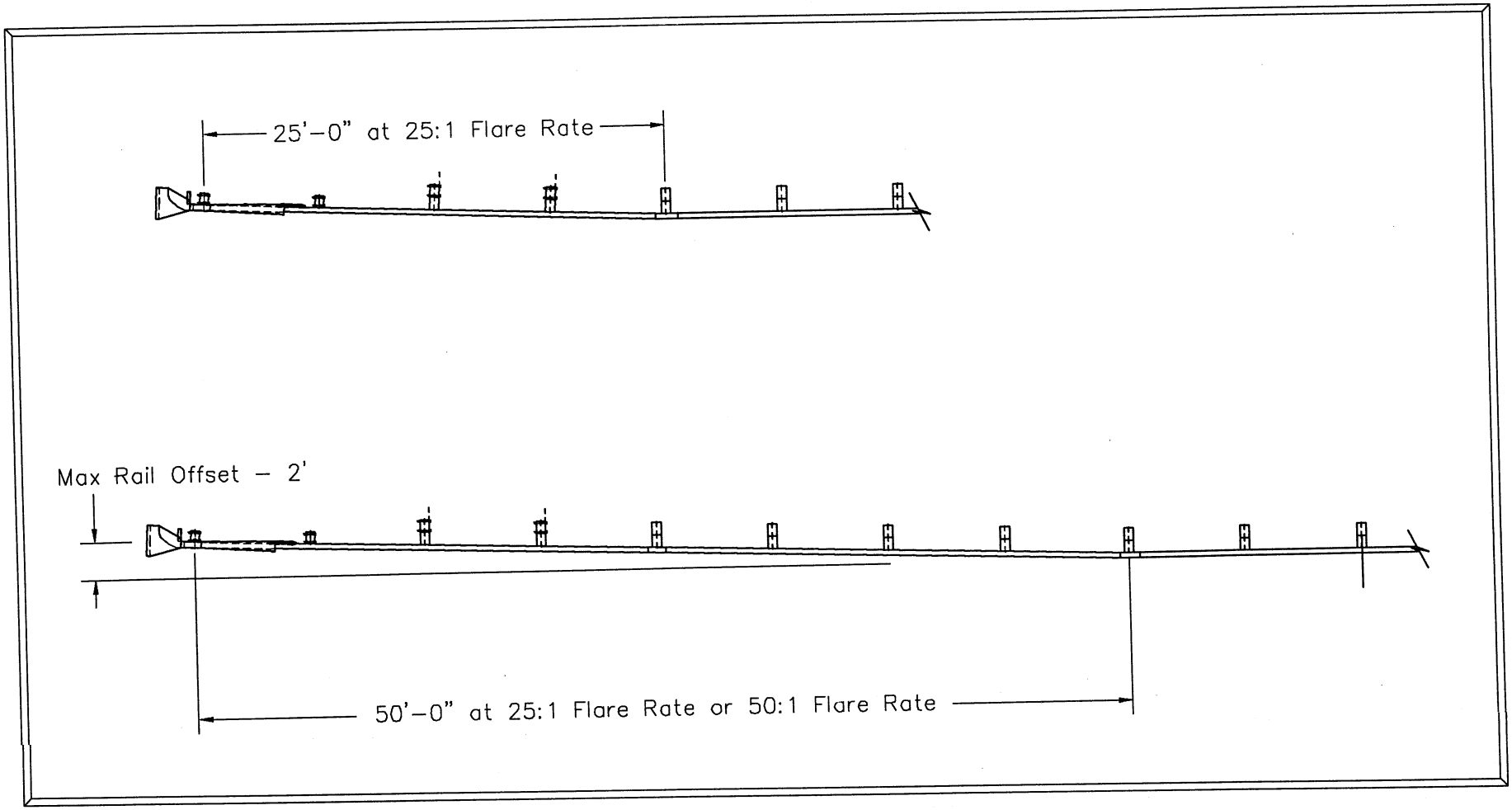

Figure 3. Optional Flared Installation

For the **eight foundation tube option**, posts 3 through 8 are inserted in foundation tubes with soil plates (SP600). Install the 5-1/2″ x 7-1/2″ x 45" wood posts (P650) in the foundation tubes at the post 3 through 8 locations. Secure the post to each foundation tube with a 5/8″ x 10″ hex head bolt (B581004) and H.G.R. nut (N050) with a washer (W050) under both the bolt head and the nut. *Do not over tighten and deform the tube.* There are no CRT posts for this option.

Figure 4 shows the section of a CRT post. The CRT post may be driven with an approved driving head. For stiff soils, drill a 6″ pilot hole and force the post to the appropriate depth by impact or vibratory means with an approved driving head. The post may also be installed by augering and backfilling if the contractor so prefers. The initial hole must be large enough to allow adequate room for proper compaction of the soil during backfill. *Care must be taken to carefully compact the backfill to prevent settlement or lateral displacement of the post.*

Figure 5 shows the section of a post in a standard 5'-0" or 4'-6" long foundation tube with a soil plate. Fasten the soil plate to the foundation tube with two 5/8″ x 7-1/2″ hex head bolts (B580754) and H.G.R. nuts (N050) through the bottom holes of the foundation tubes. *Do not over tighten and deform the tubes.* These bolts attach the soil plate to the foundation tube and stop the post from sliding all the way into the tube during installation.

Do not drive the foundation tube with wood post inserted. If the soil is penetrable so that the foundation tube does not deform, the foundation tube may be driven with an approved driving head. For non-penetrable soil, drill a 6″ pilot hole and force the tube to the appropriate depth by impact or vibratory means with an approved driving head. The tube may also be installed by augering and backfilling if the contractor so prefers. The initial hole must be large enough to allow adequate room for proper compaction of the soil during backfill. *Care must be taken to carefully compact the backfill to prevent settlement or lateral displacement of the foundation tubes.*

If rock is encountered during driving or excavation, refer to appropriate State specifications. Guidelines will vary from State to State.

Figure 6 illustrates the proper placement of the foundation tubes. The top of the foundation tubes should not project more than 4″ above the ground line when measured along a 5' cord, according to AASHTO specifications. Site grading may be required if the top of the foundation tubes project more than 4″ above the ground line. The finished guardrail height should generally be 27-3/4″ above the edge of the shoulder.

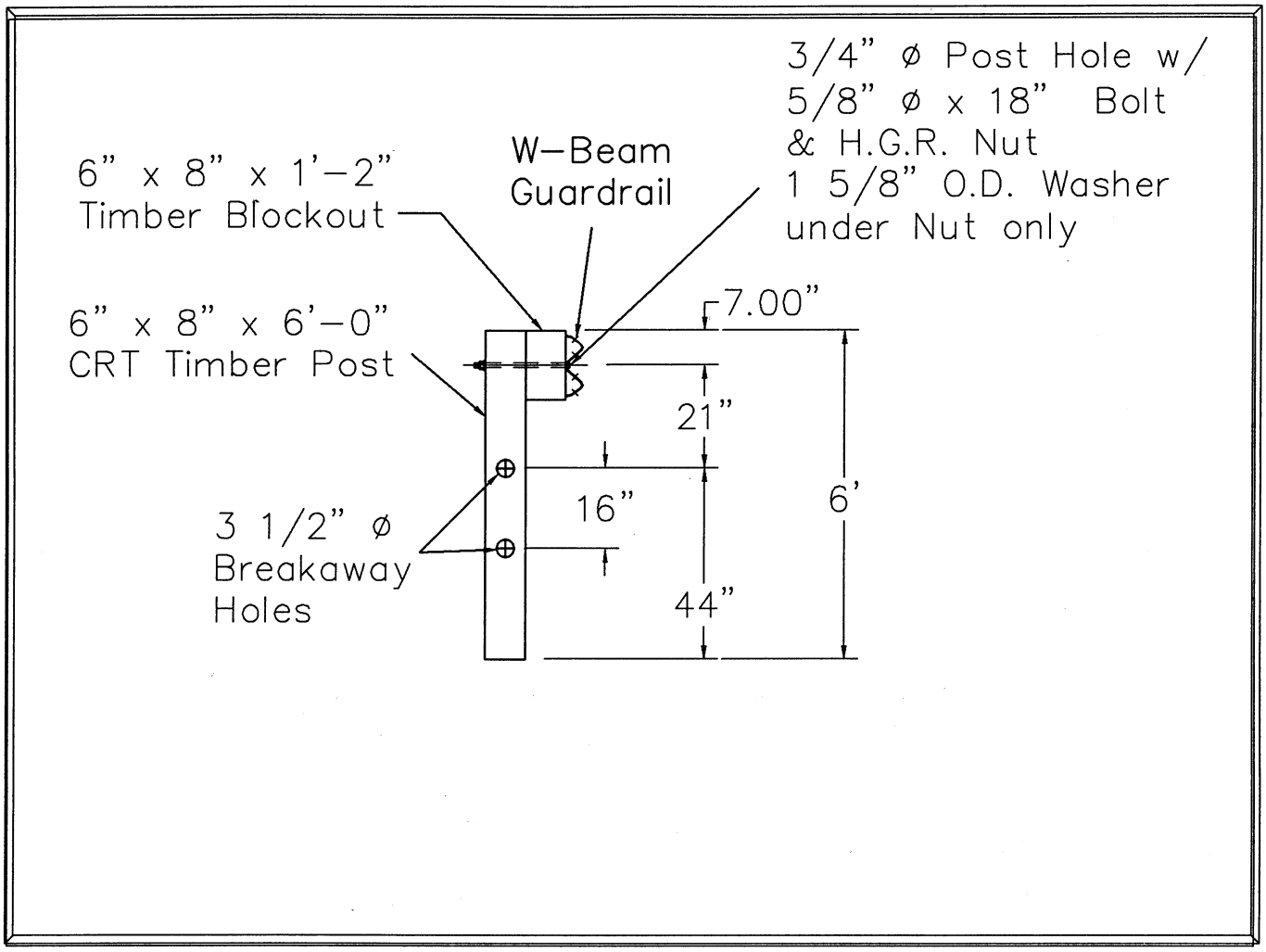

SKT 350 DESIGN OPTION	LOCATION OF CRT POSTS
(2) FOUNDATION TUBES	POSTS 3 THROUGH 8
(4) FOUNDATION TUBES	POSTS 5 THROUGH 8

Figure 4. Section at CRT Post

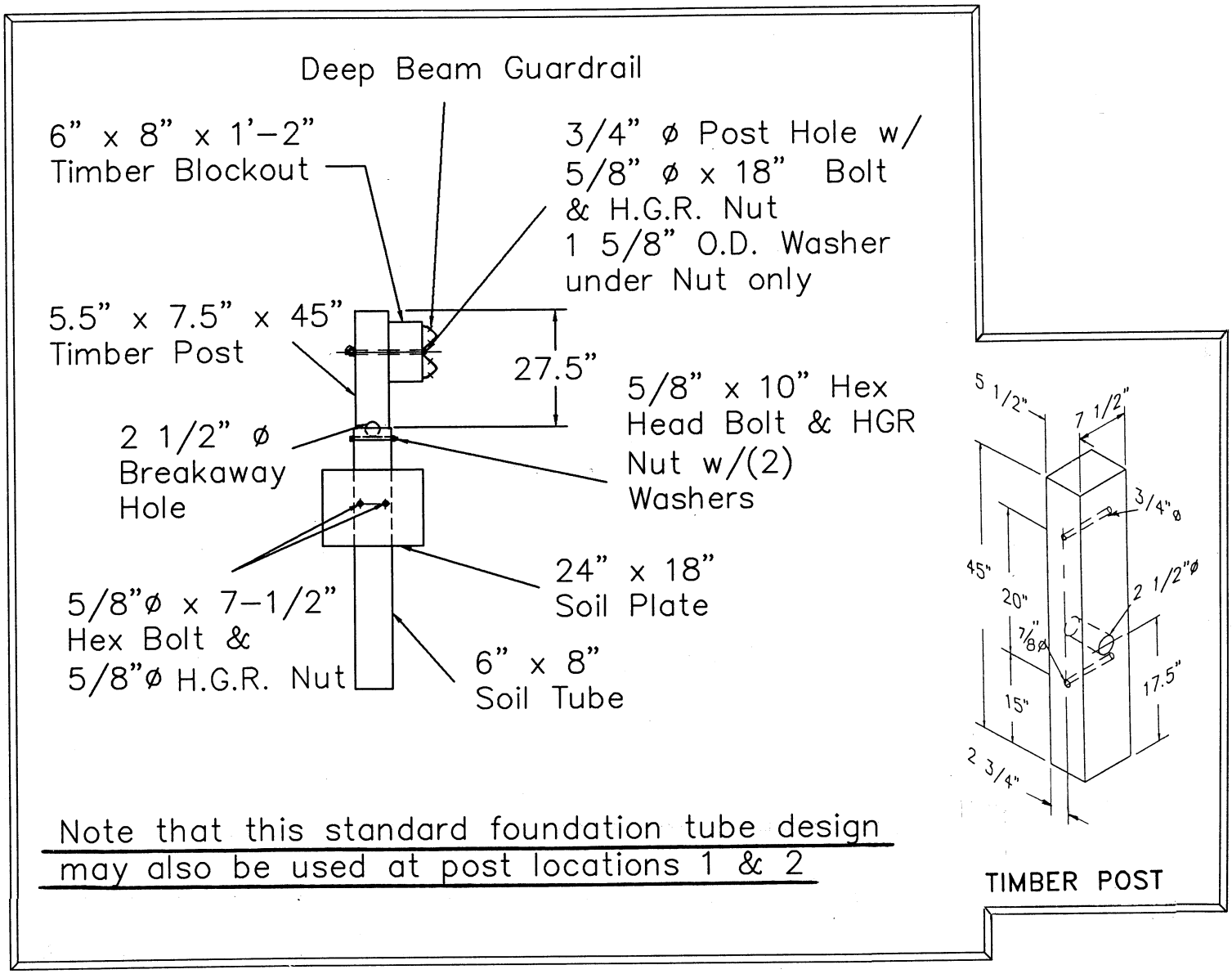

SKT 350 DESIGN OPTION	LOCATION OF STANDARD FOUNDATION TUBES WITH SOIL PLATES
(4) FOUNDATION TUBES	POSTS 1 THROUGH 4 **OR** POSTS 3 AND 4
(8) FOUNDATION TUBES	POSTS 1 THROUGH 8 **OR** POSTS 3 THROUGH 8

Figure 5. Section at Posts with 5'-0" or 4'-6" Foundation Tubes with Soil Plates

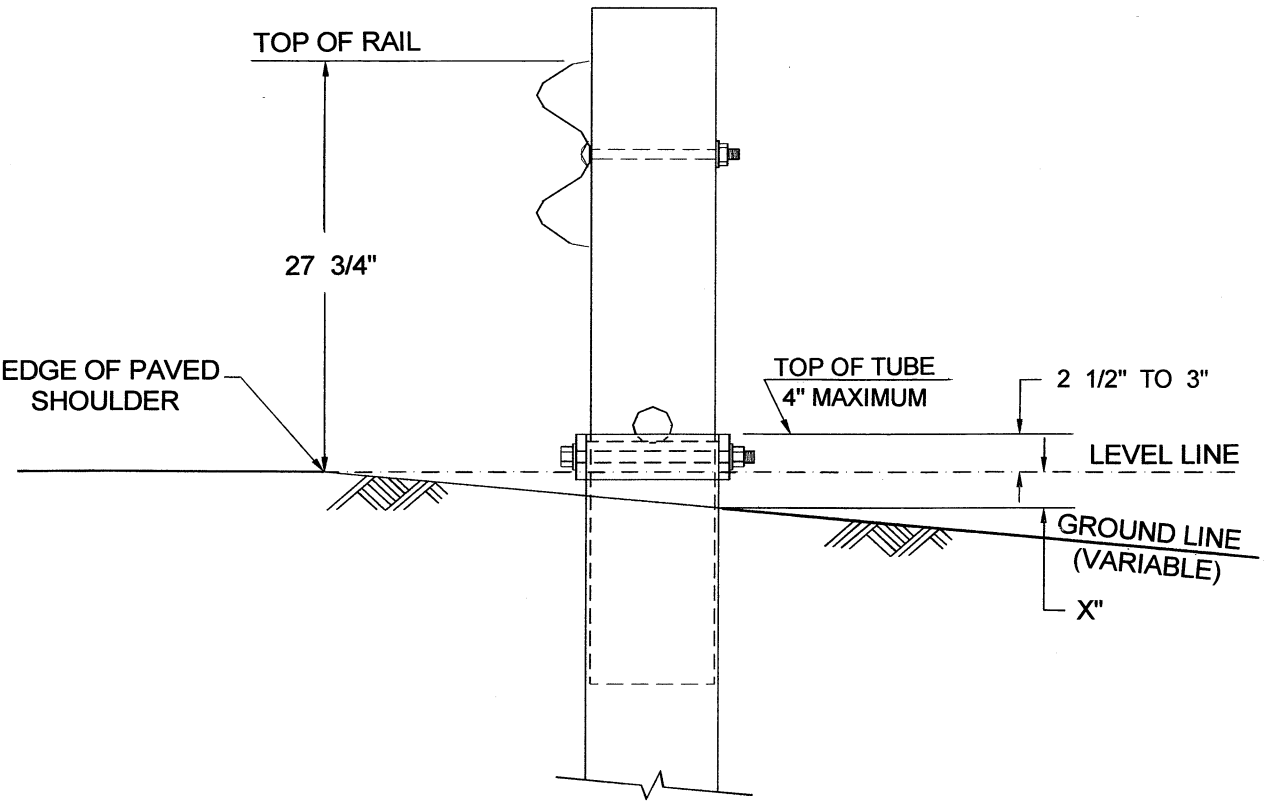

Figure 6. Proper Placement of Foundation Tubes

Based on a level line from the edge of the paved shoulder, the top of the foundation tube should normally be 2-1/2" to 3" above the level line. The placement of the foundation tube should be an appropriate depth below the level line in order to maintain the 27-3/4" guardrail height from the edge of the shoulder.

If the slope drops off some distance (*X*") from the edge of the shoulder to the tube location, as shown in **Figure 6**, the depth of the foundation tube should be reduced by *X*" in order to maintain the proper guardrail height. The top of the foundation tube will project (*X*" + 2-1/2") to (*X*" + 3") above the ground. In order not to exceed the AASHTO 4" maximum projection above the ground, site grading will be necessary to assure that the "*X* " dimension would not be more than 1-1/2" to 1" respectively.

Installing Posts 1 and 2 with Groundline Strut

Figure 7 shows the above ground details and **Figure 8** shows the section at post locations 1 and 2. Posts 1 and 2 may be installed with either 6'-0" long split foundation tubes (S730) without soil plates, solid 6'-0" long foundation tubes (E731) without soil plates, standard 5'-0" long foundation tubes (S735) with soil plates (SP600) or standard 4'-6" long foundation tubes (E735) with soil plates (SP600).

For the **6'-0" long split foundation tube**, fasten one 5/8" x 7-1/2" hex head bolt (B580754) and H.G.R. nut (N050) through the bottom hole of the foundation tube. *Do not over tighten and deform the tube*. The bolt is intended to stop the post from sliding all the way into the tube during installation.

Do not drive the foundation tube with wood post inserted. If the soil is penetrable so that the foundation tube does not deform, the foundation tube may be driven with an approved driving head. For non-penetrable soil, drill a 6" pilot hole and force the tube to the appropriate depth by impact or vibratory means with an approved driving head. The tube may also be installed by augering and backfilling if the contractor so prefers. The initial hole must be large enough to allow adequate room for proper compaction of the soil during backfill. *Care must be taken to carefully compact the backfill to prevent settlement or lateral displacement of the foundation tubes.*

If rock is encountered during driving or excavation, refer to appropriate State specifications. Guidelines will vary from State to State.

The top of the foundation tubes should not project more than 4" above the ground line when measured along a 5' cord, according to AASHTO specifications. Site grading may be required if the top of the foundation tubes project more than 4" above the ground line. The finished guardrail height should generally be 27-3/4" above the edge of the shoulder (see **Figure 6**).

The installation procedure for the **solid 6'-0" long foundation tubes without soil plates** is the same as that for the split foundation tubes. The installation procedure for the **standard 5'-0" long foundation tubes with soil plates** or the **4'-6" long foundation tubes with soil plates** is described previously under the Section on "Installing Posts 3 through 8" and will not be repeated here.

Insert the pipe sleeve (E740) into the 2-1/2" diameter hole near the base of the 5-1/2" x 7-1/2" x 45" wood post (P650) and install the post in the foundation tube at post location 1. Install the second 5-1/2" x 7-1/2" x 45" wood post in the foundation tube at post location 2, and fit the groundline strut (E780) between the two posts. Secure the post to each foundation tube with a 5/8" x 10" hex head bolt (B581004) and H.G.R. nut (N050) with a washer (W050) under both the bolt head and the nut. These bolts will serve to secure the posts and attach the groundline strut to the foundation tubes, as shown in **Figure 8**.

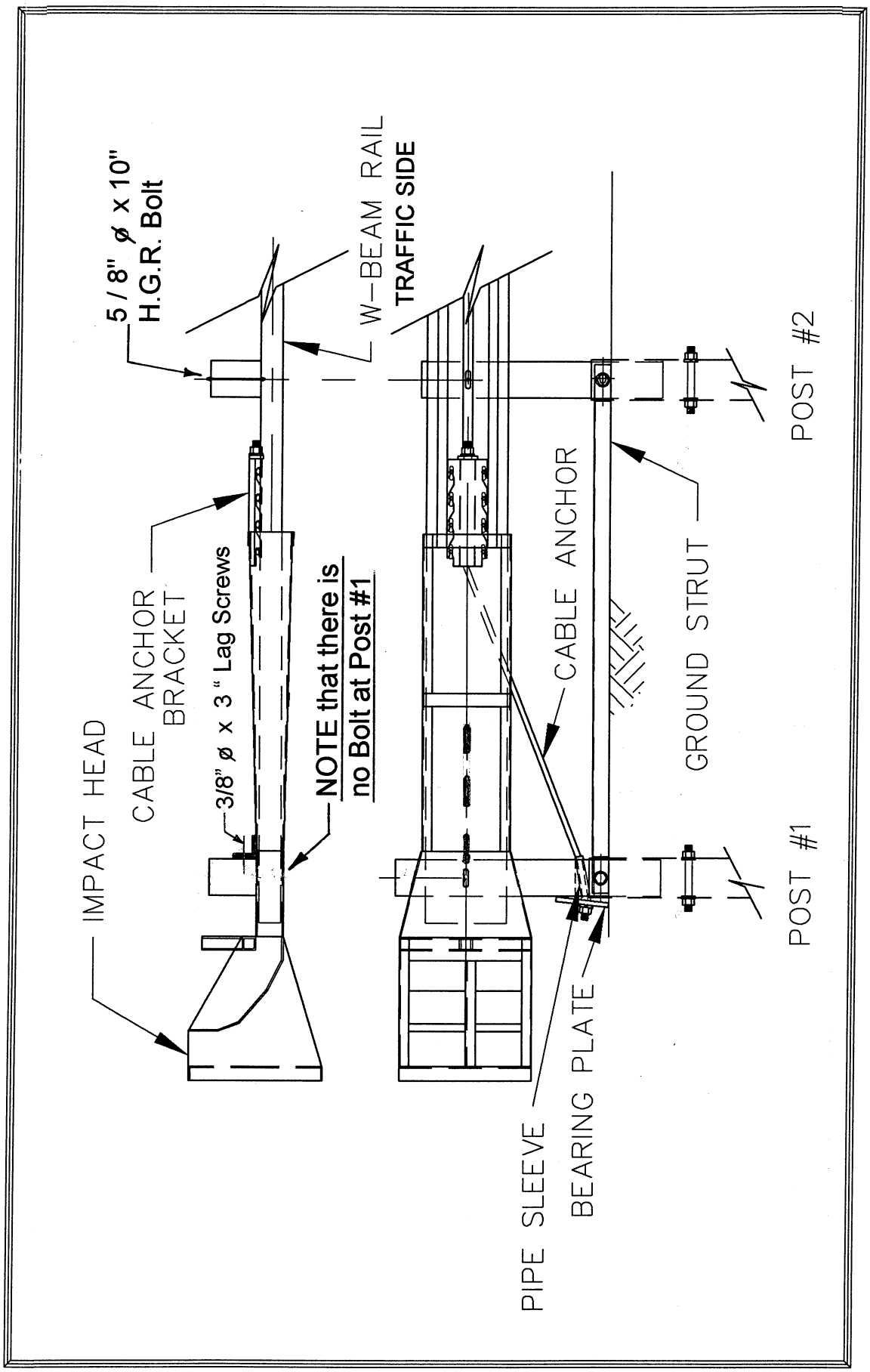

Figure 7. Above-Ground Details at Post Locations 1 and 2.

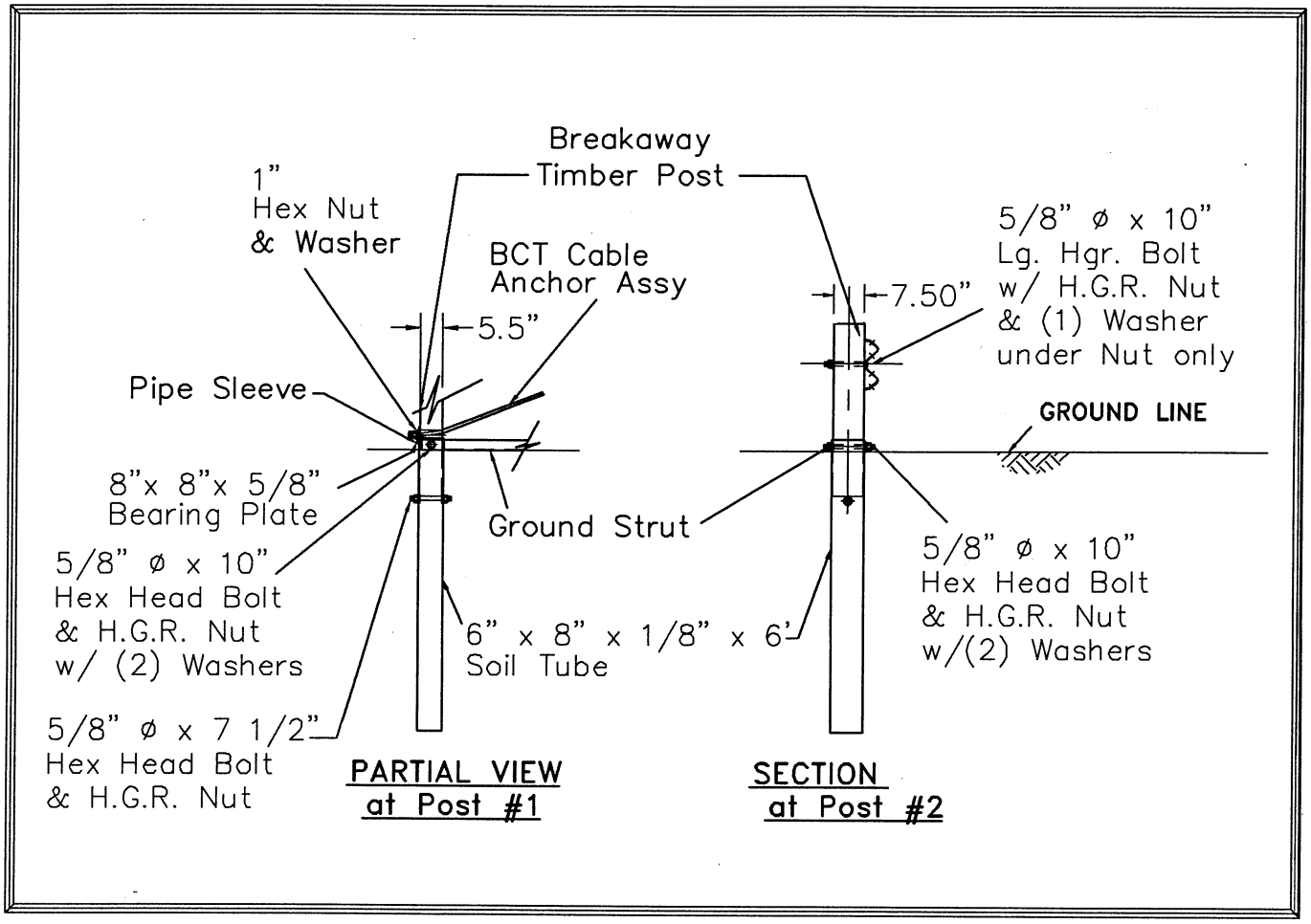

Note. The optional **6'-0" long split foundation tubes** may be substituted with either **solid 6'-0" long foundation tubes** without soil plates, standard **5'-0" long or 4'-6" long foundation tubes** with soil plates.

Figure 8. Section at Post Locations 1 and 2.

Installing Guardrail

Attach the standard W-beam guardrail sections, 12'-6" (G1203) or 25'-0" (G1205), beginning at post 9. Attach the W-beam guardrail end section to span from post 1 to 3 for the 12'-6" rail (S1303), or from post 1 to 5 for the 25'-0" rail (S1305). The rail is to be spliced with 5/8″ x 1-1/4″ H.G.R. bolts (B580122) and 5/8″ H.G.R. nuts (N050).

For ease of installation, it is recommended to have the eight 1/2" cable anchor bracket shoulder bolts (SB58A) and the cable anchor bracket (S760) attached to the W-beam guardrail end section prior to attaching the guardrail to the posts. See Section on "Installing Cable Anchor Bracket" for details.

The rails are to be attached to posts and blockouts at post locations 3 through 8 with 5/8″ x 18" H.G.R. bolts (B581802) and nuts (N050). There is no blockout on posts 1 and 2. The rail is attached to post 2 only with a 5/8″ x 10″ H.G.R. bolt (B581002). **Note that no bolt is used at post #1**. Be sure to place a 5/8″ flat washer (W050) on the backside of posts 2 through 8 under each nut (N050).

It is recommended that the post bolt be placed through the rail at post location #5 where the rail splice occurs but it is not necessary.

NOTE: After the blockout is attached, drive a galvanized steel 10d common nail through the block and into the post (toe nailed) to prevent rotation if the wood shrinks.

Installing Cable Anchor Bracket

For ease of installation, it is recommended to have the eight 1/2" cable anchor bracket shoulder bolts (SB58A) and the cable anchor bracket (S760) attached to the W-beam guardrail end section prior to attaching the guardrail to the posts. If this procedure is not followed, Post #2 may interfere with attaching the bracket.

The eight 1/2" cable anchor bracket shoulder bolts (SB58A) are attached to the W-beam guardrail end section with two 1-1/16" OD x 9/16" ID structural washers (W050A), one on each side of the guardrail, and a 1/2" structural nut (N055A). The shoulders of the bolts should be on the backside of the guardrail, away from traffic, as shown in **Figure 9**.

For ease of installation, attach the cable anchor bracket shoulder bolts to the rail "finger tight" only. Then align the slots on the cable anchor bracket (S760) with the shoulder bolts and tap the cable anchor bracket onto the shoulder portion of the bolts using a hammer. Tighten the bolts with a wrench when the bracket is in place. When installed properly, the welded plate on the cable anchor bracket should be toward Post #2, as shown in **Figure 10**.

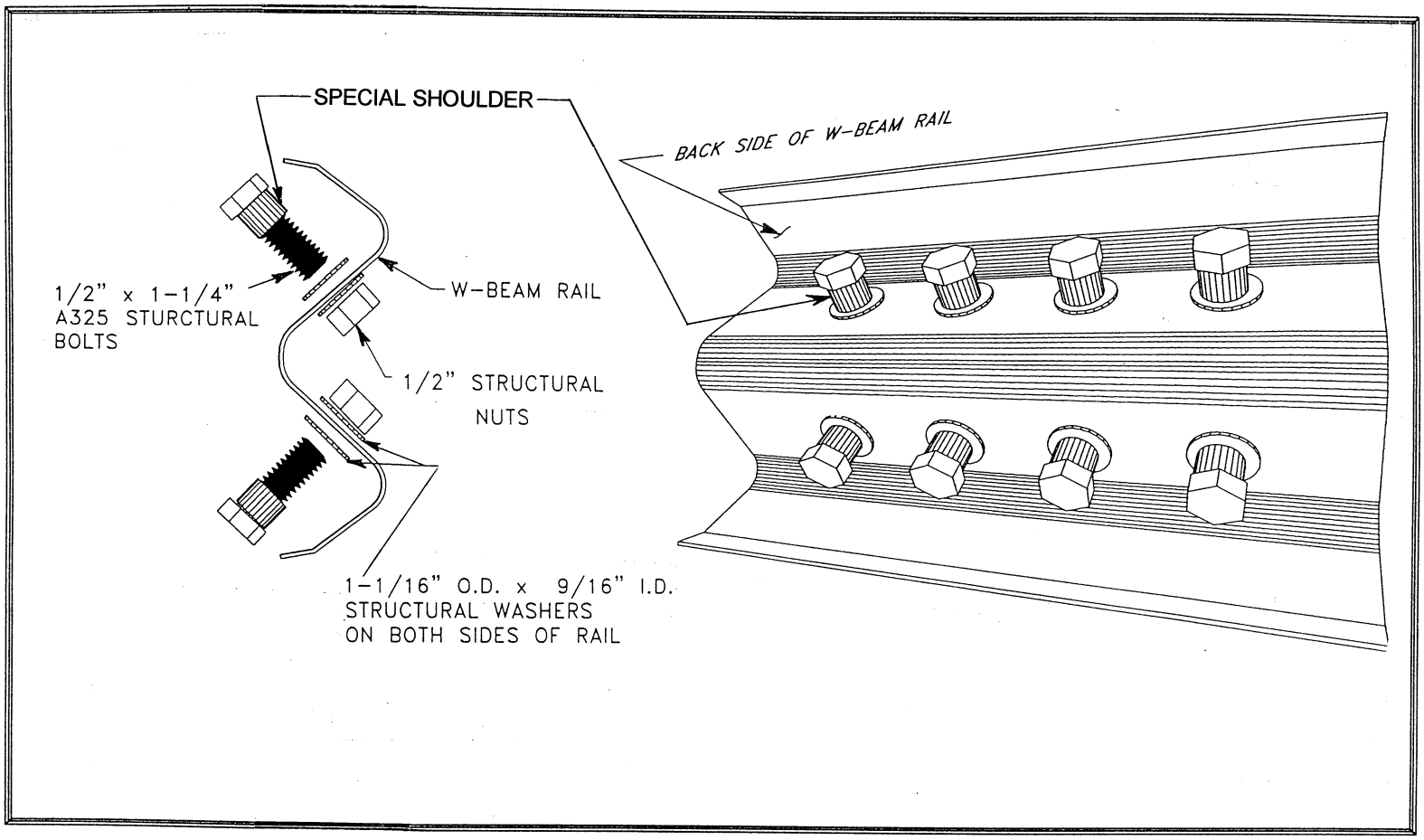

Figure 9. Installation of Cable Anchor Bracket Shoulder Bolts.

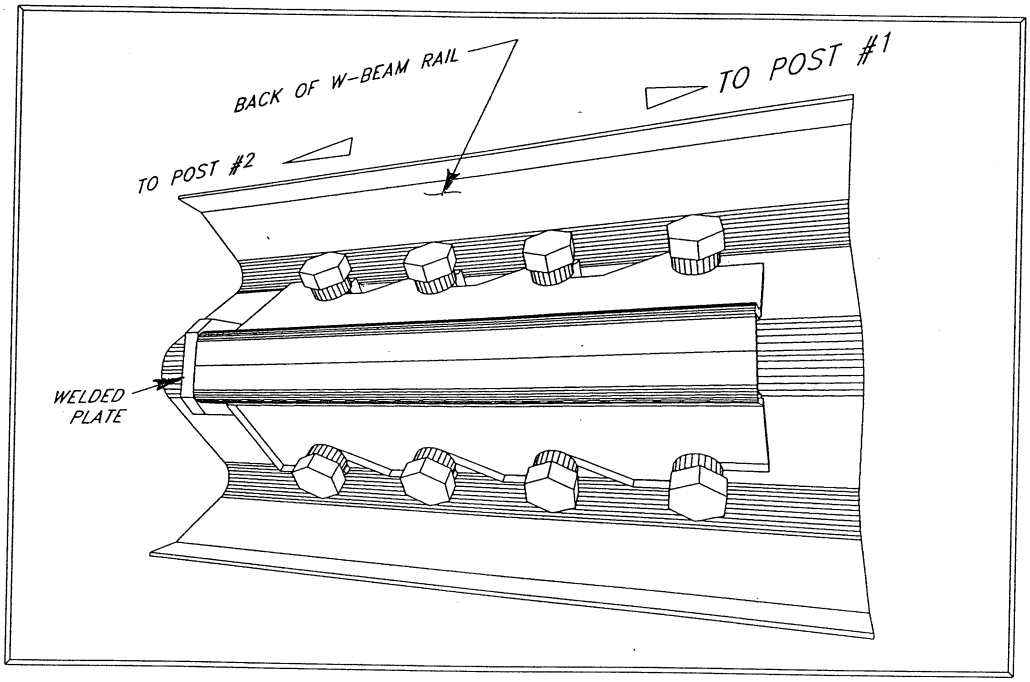

Figure 10. Installation of Cable Anchor Bracket.

Installing the SKT 350 Impact Head

The eight cable anchor bracket shoulder bolts and the cable anchor bracket should be attached to the W-beam guardrail end section prior to attaching the ***SKT 350*** impact head to the first post with lag screws.

Place the impact head (S3000) with the guide chute over the end of the W-beam guardrail. The impact head should be positioned so that the protruding tube is on the backside of the guardrail, away from traffic as shown in **Figure 2** and **Figure 7**. Slide the impact head forward until the post angle attachments on the impact head are aligned with the downstream side of the first post. This is the side facing post #2. Attach the impact head to the first post with two 3/8″ x 3″ lag screws (E350), one each for the top and bottom post angle attachments. A 1/4″ pilot hole is required to avoid breaking the lag screw. Note that an earlier design of the ***SKT 350*** impact head had the attachment to post #1 with the post angle attachments of the impact head centered on the first post. This design is still acceptable.

Note. It is recommended that the face of the impact head be delineated with an object marker that meets State specifications for better night visibility. However, the impact face object marker is not included as part of the shipped materials for the ***SKT 350*** unless specifically requested in the contract plans.

Installing Cable Assembly

Place the cable assembly (E770) through the cable anchor bracket and through the sleeve of post 1. Place the bearing plate (E750) at the base of post 1 with 5″ dimension up and 3″ dimension down. Place a nail over the bearing plate to prevent the plate from rotating. Secure both ends of the cable assembly with a 1″ hex nut (N100) and washer (W100). While tightening cable, use a 2-lb hammer to tap the cable anchor bracket from the downstream end to ensure that it is securely interlocked with the bolts. Restrain the cable at the end being tightened to avoid twisting the cable.

Upon completion of the installation, the cable should be taut and the cable anchor bracket should be fully seated on the shoulder portion of the cable anchor bolts. *It is very important that the cable anchor bracket be fully seated on the shoulder portion of the cable anchor bolts.*

SKT 350 Installation Checklist

State:_____

Date:_____

Project #:_____

Location:_____

☐ The rail height is in accordance with the plans (generally 27-3/4″ above the edge of the shoulder).

☐ The rail is not attached to the post at post location #1.

☐ The foundation tubes do not protrude more than 4″ above the ground line (measured by the AASHTO 5' cord method). Site grading may be necessary to meet this requirement.

☐ The bolts at the top of the foundation tubes are not over-tightened, deforming the walls of the tubes.

☐ The guide chute of the impact head is parallel to the top of the rail and the impact head does not encroach on the shoulder (a 50:1 taper is permitted to eliminate the potential for encroachment).

☐ The two lag screws holding the impact head to post 1 are snug.

☐ The 8″ x 8″ bearing plate at post 1 is correctly positioned with the 5" dimension up & the 3" dimension down. The anchor cable is taut and correctly installed. A nail has been placed over the bearing plate to prevent rotation.

☐ The cable anchor bracket shoulder bolts are properly attached to the W-beam guardrail and the cable anchor bracket is fully seated on the shoulder portion of the bolts.

☐ Posts installed in foundation tubes have the 2-1/2″ breakaway hole located parallel to the roadway with the bottom of the hole at the top of the tube.

☐ CRT posts have two 3-1/2″ breakaway holes (checked prior to installation) located parallel to the roadway with the center of the top hole located at the ground line.

☐ If the posts were augered, be sure the backfill material around the posts is compacted.

☐ No washers are used on the face of the rail except at the cable anchor bracket bolts.

Additional notes: _____

_____

Inspection performed by: _____

Repairing the *SKT 350*

Equipment Needed for Repair Operation

- Acetylene torch to cut off the damaged rail,
- Heavy duty chain to remove the impact head is sometimes required (see **Figure 11**),
- S.A.E. wrench or socket sizes 9/16", 7/8", 15/16", 1-1/4", and 1-1/2",
- Vice grip or channel lock pliers,
- Sledge hammer,
- Post remover tool (see **Figures 12 and 13**),
- Other normal guardrail tools.

General Repair Procedures

After an end-on impact occurs with the ***SKT 350***, it will normally require replacement of the first 12'-6" or 25'-0" end section of rail and any other damaged rail section(s) and any broken post(s). For a traffic face impact, the damage will be to the downstream rail section(s) and associated posts.

The general step-by-step procedure for repairing a damaged ***SKT 350*** terminal is as follows:

(1) Check the impact head for damage.

(2) Check the cable anchor bracket and cable assembly for damage. The bearing plate, nuts, washers, cable anchor bracket, and the special cable anchor bracket shoulder bolts are rarely damaged.

(3) Check the number of broken posts and wood blockouts that need to be replaced, along with any damaged bolts. Inventory and pick up the reusable parts.

(4) Torch off the kinked rail near the outlet of the impact head. The impact head should be able to be **removed by hand** at this point. If not, then hook up a chain attachment through the opening behind the impact plate of the impact head, as shown in **Figure 11**. Pull the impact head off the rail with the chain attached to a truck frame with the W-beam guardrail still attached to the downstream guardrail posts.

(5) Disconnect and remove the damaged rail from the posts.

(6) Remove the broken posts from the foundation tubes using one of the two post removal tools (see **Figures 12 and 13**) assembled from "off the shelf hardware" items. Pound the steel pipe or screw the lag screw into the top of the broken post stub and remove the remains of the broken post by pulling on the chain. Use a pry bar as a lever if necessary.

(7) Reinstall the system following the procedures listed in this manual.

Procedures Immediately Following an Accident (Temporary)

If no repair parts are readily available immediately following an accident, the following procedure should be used to provide temporary protection of the guardrail end. It should be noted that this repair is only for temporary purposes, and the anchor cable cannot be installed to provide tension in the rail for redirectional impacts.

(1) Remove damaged rail and impact head from the roadway or shoulder area.

(2) Using an acetylene torch, cut the kinked rail off at the outlet of the impact head and inspect the head for any damage.

(3) Remove the impact head by hand. If this is not possible, then with a chain hook-up (see **Figure 11**), pull the impact head off the downstream rail that is still attached to the posts.

(4) Locate the first post downstream of any damaged rail and cut this rail off about 9″ in front of the post. If the post is at a splice, simply unbolt the damaged rail.

(5) Install the impact head on the rail and attach it to the post with lag bolts.

(6) Warning signs should be used where appropriate.

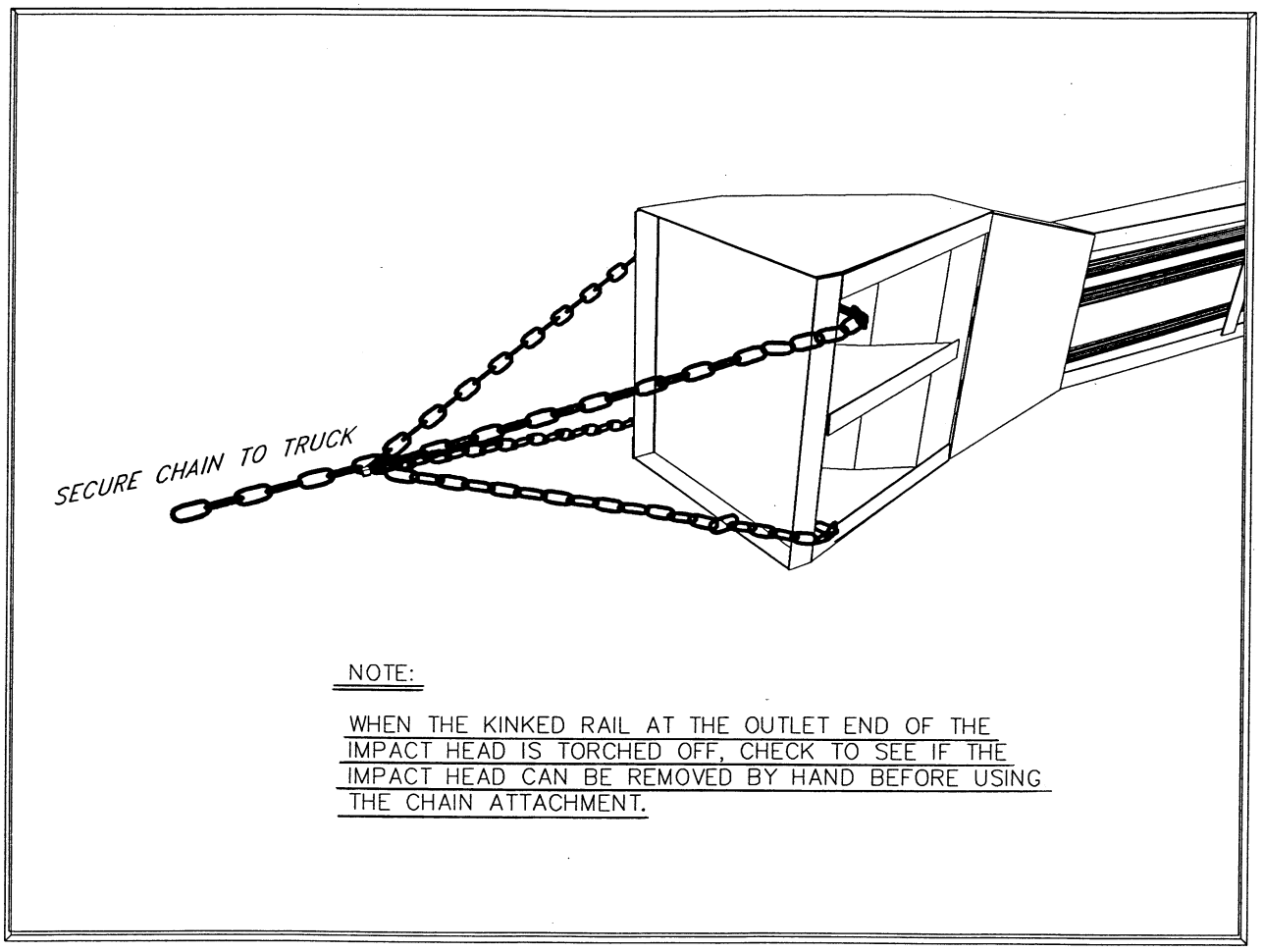

Figure 11. Chain Attachment to Remove Impact Head

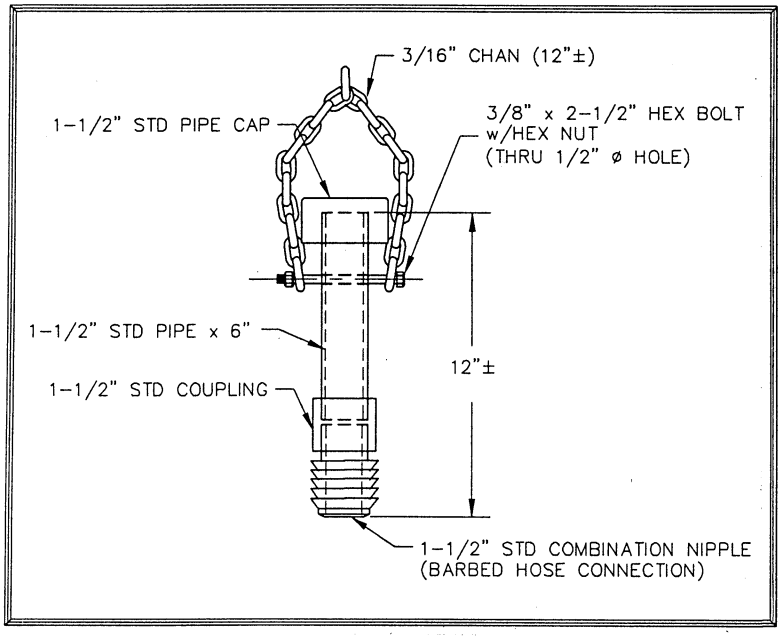

Figure 12. Wood Post Pulling Tool (Pipe Option)

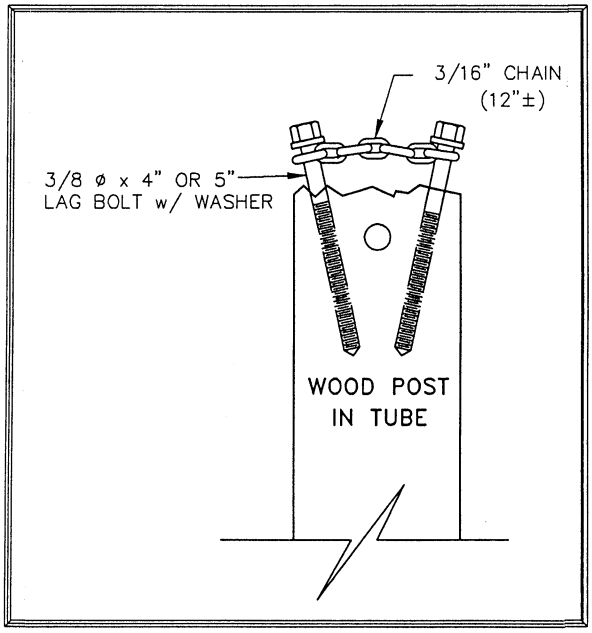

Figure 13. Wood Post Pulling Tool (Lag Screw Option)

Installation Instructions

for the

FLEAT 350

R O A D S Y S T E M S , I N C .

P. O. Box 2163

Big Spring, Texas 79721

Phone: (432) 263-2435 FAX: (432) 267-4039

Technical Support & Marketing Phone: (330) 346-0721

Technical Support & Marketing Fax: (330) 346-0722

This Installation Manual can be downloaded from RSI web site
www.roadsystems.com

ADDENDUM

June 2001

The **FLEAT** may now be installed with **all 6'-3" post spacing**. This approval is good for a wood post system or a steel post system. Previously, the middle 12'-6" panel had 4'-2" post spacing.

Although the post spacing is now all 6'-3", the FLEAT still has 7 breakaway posts. This is because there is now a breakaway post at the 37'-6" downstream location where the flare begins.

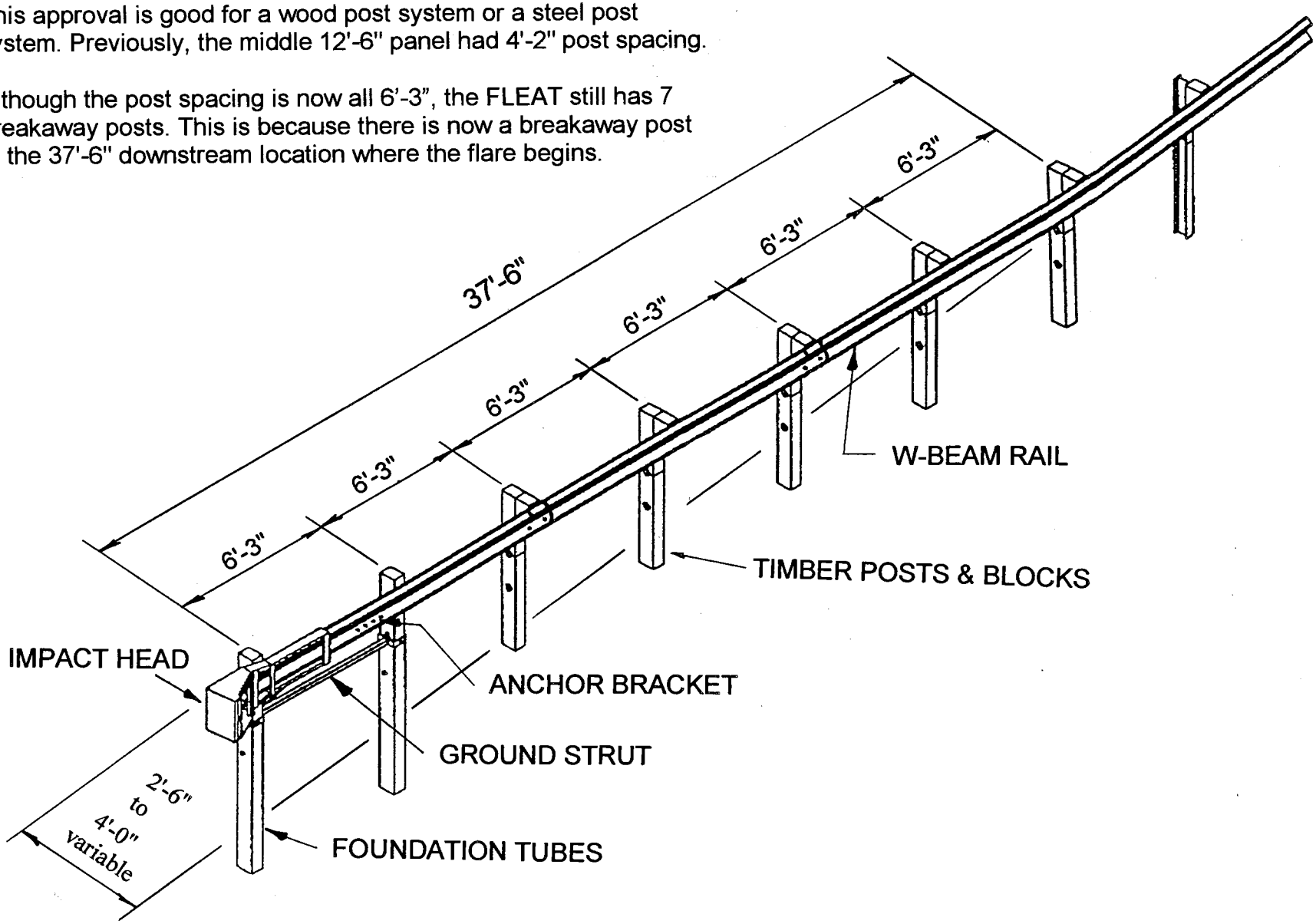

Table of Contents

Page

LIST OF FIGURES ii

LIST OF TABLES iii

Installing the *FLEAT 350* 3

Materials 3
Design Options 3
Site Preparation 5
Tools Required 5
Installation Procedures 5
Installing Posts 3 through 7 5
Installing Posts 1 and 2 with Groundline Strut 8
Installing Guardrail 12
Installing Cable Anchor Bracket 12
Installing ***FLEAT 350*** Impact Head 14
Installing Cable Assembly 14
FLEAT 350 Installation Checklist 15

Repairing the *FLEAT 350* 16

Equipment Needed for Repair Operation 16
General Repair Procedures 16
Procedures Immediately Following an Accident (Temporary) 17

PUBLICATION ~ 020205

List of Figures

Figure		Page
1	Isometric View of the ***FLEAT 350***	1
2	Plan & Elevation View of the ***FLEAT 350***	2
3	Section at CRT Post	6
4	Proper Placement of Foundation Tubes	7
5	Above-Ground Details at Post Locations 1 and 2	9
6	Section at Post Locations 1 and 2	10
7	Optional 5'-0" or 4'-6" Foundation Tubes with Soil Plates	11
8	Installation of Cable Anchor Bracket Shoulder Bolts	13
9	Installation of Cable Anchor Bracket	13
10	Wood Post Pulling Tool (Pipe Option)	18
11	Wood Post Pulling Tool (Lag Screw Option)	18

List of Tables

Table		Page
1	***FLEAT 350*** Design Options	3
2	***FLEAT 350*** Bill of Materials	4

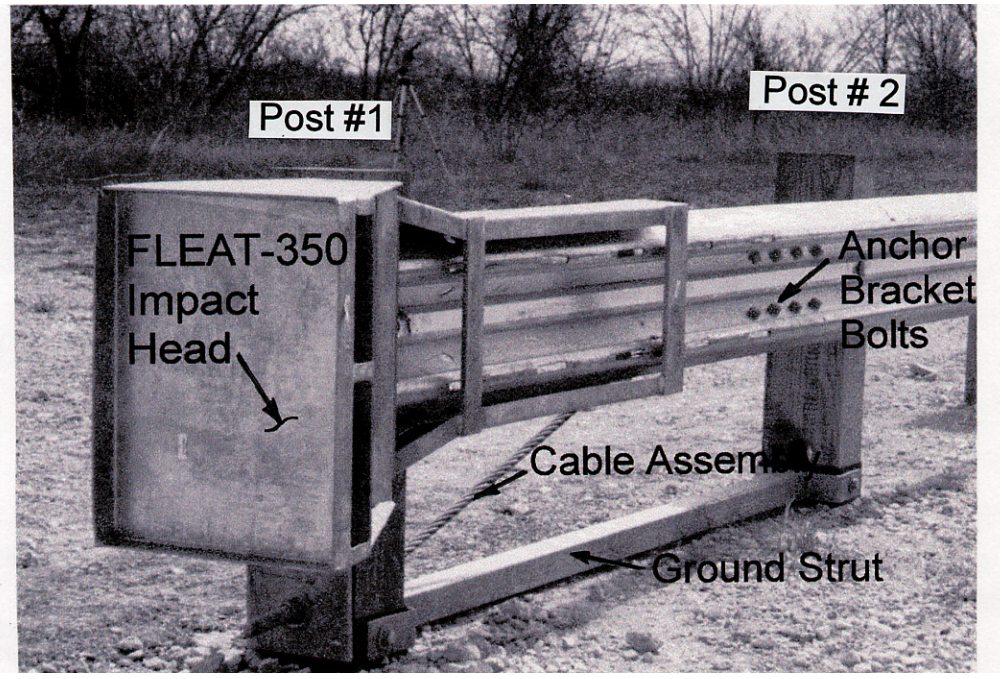

Figure 1. Isometric view of the *FLEAT 350.*

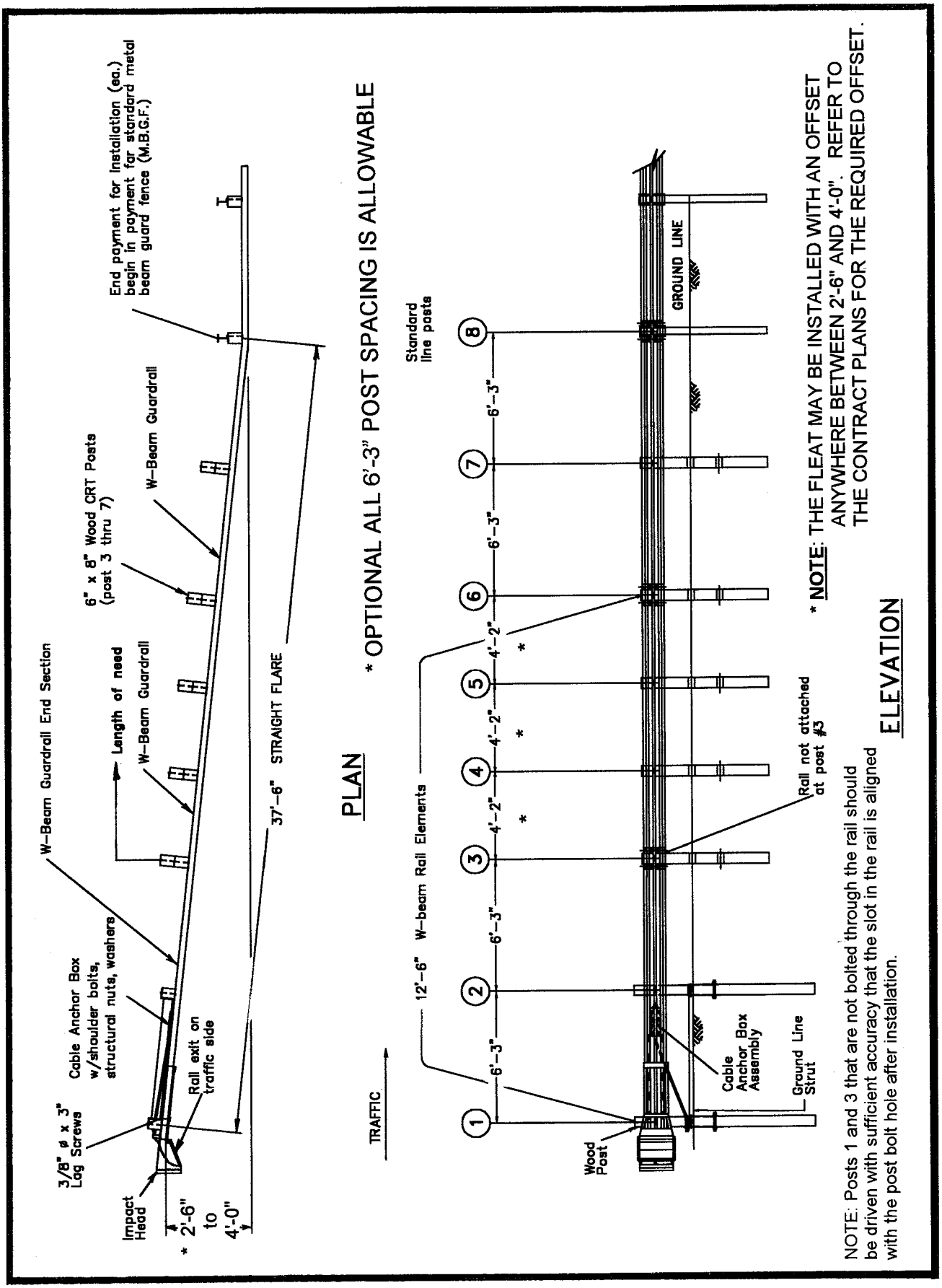

Figure 2. Plan and Elevation Views of *FLEAT 350.*

Installing the *FLEAT 350*

Materials

As packaged, the ***FLEAT 350*** system includes all materials needed for a complete installation except for the impact face object marker. The length of the system in this configuration is 37'-6".

Design Options

There are four foundation tube options as shown in **Table 1** below.

Table 1. *FLEAT 350* Design Options

FLEAT 350 **Design Options**	Total Foundation Tubes	Number of Standard BCT Posts	Number of CRT Posts	Total Number of Posts
6'-0" split Foundation Tube	2	2	5	7
6'-0" solid Foundation Tube	2	2	5	7
5'-0" or 4'-6" Foundation Tubes with soil plate	2	2	5	7

Figure 6 shows a section with the 6'-0" foundation tubes.

Figure 7 shows a section with the 5'-0" or 4'-6" foundation tubes with soil plates.

Table 2. *FLEAT 350* Bill of Materials

Code #	Quantity	Description
F3000	1	Impact Head
F1303	1	W-Beam Guardrail End Section, 12 Ga., 12-6"
F1304	1	W-Beam Guardrail, Center Section (4'-2" spacing) 12 Ga., 12'-6"
G1203	1	W-Beam Guardrail, (6'-3" spacing) 12 Ga., 12'-6"
S730	2	* Foundation Soil Tubes, 6" x 8" x 6'-0" **(SEE NOTE BELOW)**
E740	1	Pipe Sleeve - 2″ Standard Pipe x 5-1/2″
E750	1	Bearing Plate - 8″ x 8″ x 5/8″
S760	1	Cable Anchor Bracket
E770	1	BCT Cable Anchor Assembly
E780	1	Ground Strut
P650	2	5-1/2″ x 7-1/2″ x 45″ Wood Posts
P671	5	6" x 8" x 6'-0" Wood CRT Posts
P675	5	6" x 8" x 14" Timber Blockouts
Hardware	* The optional **6'-0" long split** foundation tubes may be substituted with either **solid 6'-0" long** foundation tubes without soil plates or standard **5'-0" long** or **4'-6" long** foundation tubes with soil plates.	
B580122	24	5/8″ x 1¼″ Splice Bolts
B580754	2	5/8″ x 7½″ Hex Bolts
B581004	2	5/8″ x 10″ Hex Bolts
B581002	1	5/8″ x 10″ H.G.R. Post Bolt (Post 2 Only / NO BOLT USED AT POST #1)
B581802	5	5/8″ x 18" H.G.R. Post Bolts (Posts 3 through 7)
N050	34	5/8″ H.G.R. Nuts (Splice - 24, Soil Tubes - 4, Posts 2 to 7 - 6)
W050	10	5/8″ Flat Washers (2 each at Soil Tubes + 6 Posts)
N100	2	1″ Anchor Cable Hex Nuts
W100	2	1″ Anchor Cable Washers
E350	2	3/8″ x 3″ Lag Screws
SB58A	8	Cable Anchor Bracket Shoulder Bolts
N055A	8	1/2" A325 Structural Nuts
W050A	16	1-1/16" OD x 9/16" ID A325 Structural Washers

Site Preparation

The ***FLEAT 350*** is installed with a **straight flare offset anywhere between 2'-6" and 4'-0". Refer to the contract plans for the required offset**. Simply measure the offset distance over the 37'-6" length with a straight string line. This offset becomes the location of post #1. A parabolic curve is not required. Minor site grading may be necessary to prevent the foundation tubes from extending more than 4″ above the ground (see Section on Installation).

Tools Required

The tools required for installation of the ***FLEAT 350*** system are those used to install standard highway guardrails (H.G.R.), including: 9/16", 7/8", 15/16", 1-1/4", and 1-1/2" sockets and wrenches, a drill with a 1/4″ bit, and other equipment such as augers, tampers, and post pounders commonly used in driving posts.

Installation Procedures

Begin installation at the downstream end of the ***FLEAT 350*** (post location 8) to ensure that the terminal matches up with the standard section of guardrail. The major steps in the installation of the ***FLEAT 350*** are as follows:

- Install posts 3 through 7,
- Install posts 1 and 2 with groundline strut,
- Install guardrail,
- Install cable anchor bracket,
- Install the ***FLEAT 350*** impact head, and
- Install cable assembly.

NOTE: The impact head must be placed over the rail prior to tightening the rail to post # 2.

Installing Posts 3 Through 7

Posts 3 through 7 are 6" x 8" x 6'-0" CRT posts (P671). When installed properly, the hole at the ground line of these CRT posts will be parallel to the roadway. **Figure 3** shows the section of a CRT post. The CRT post may be driven with an approved driving head. For stiff soils, drill a 6″ pilot hole and force the post to the appropriate depth by impact or vibratory means with an approved driving head. The post may also be installed by augering and backfilling if the contractor so prefers. The initial hole must be large enough to allow adequate room for proper compaction of the soil during backfill. *Care must be taken to carefully compact the backfill to prevent settlement or lateral displacement of the post.*

If rock is encountered during driving or excavation, refer to appropriate State specifications. Guidelines will vary from State to State.

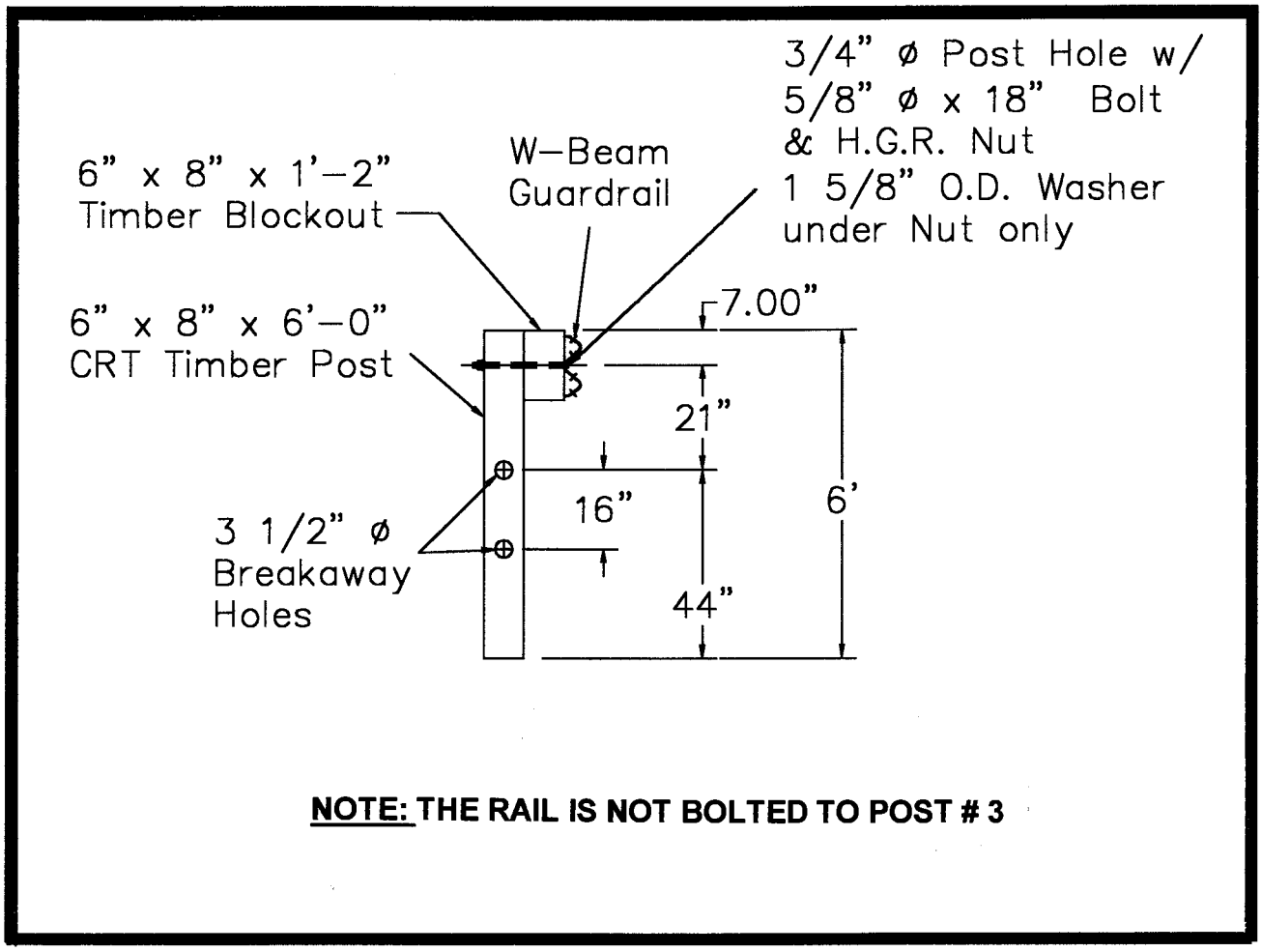

SECTION TYPICAL AT POSTS 3 - 7

Figure 3. Section at CRT Post

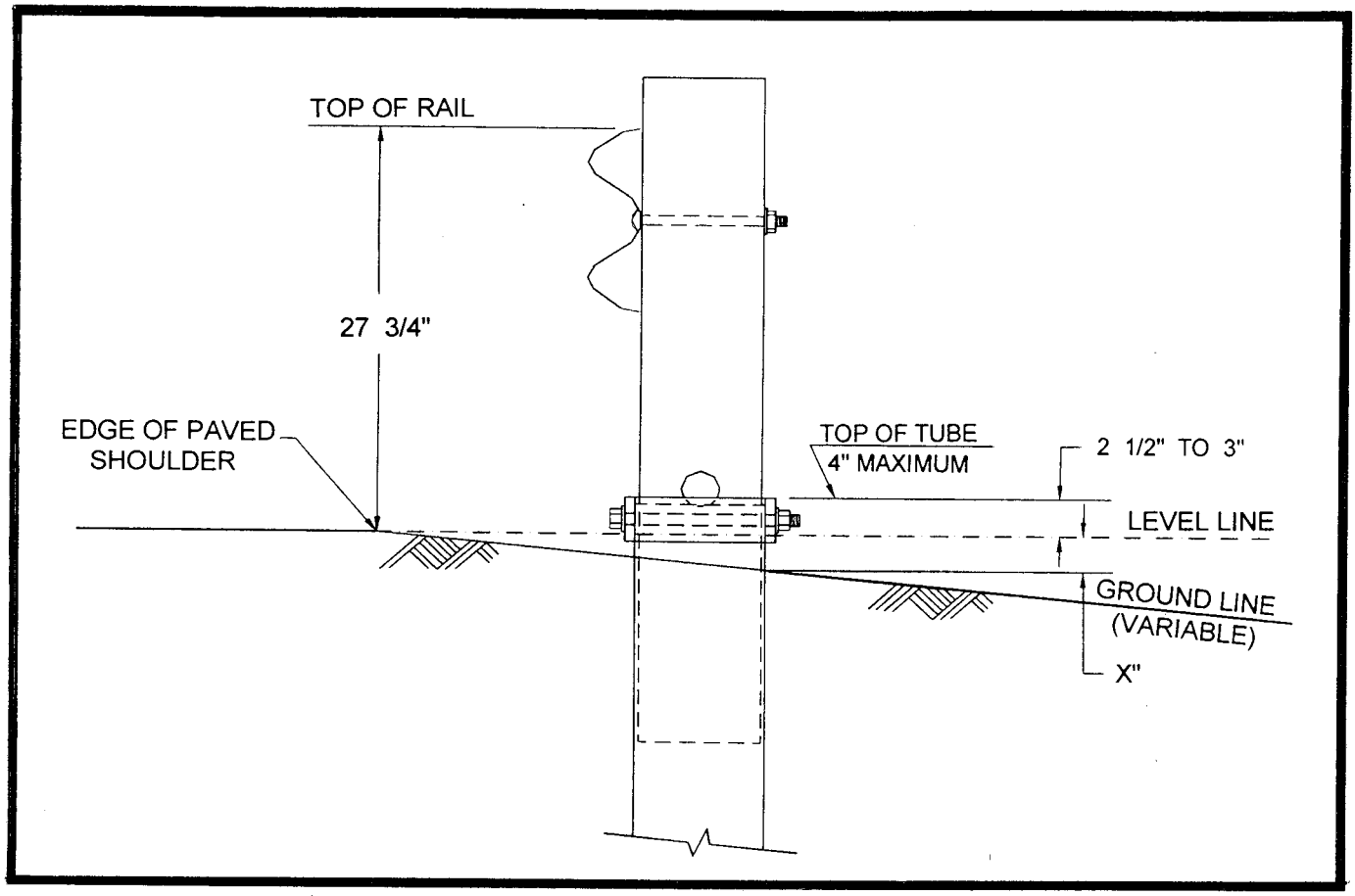

Figure 4. Proper Placement of Foundation Tubes

Figure 4 illustrates the proper placement of the foundation tubes. The top of the foundation tubes should not project more than 4″ above the ground line when measured along a 5' cord, according to AASHTO specifications. Site grading may be required if the top of the foundation tubes project more than 4″ above the ground line. The finished guardrail height should generally be 27-3/4″ above the edge of the shoulder.

Based on a level line from the edge of the paved shoulder, the top of the foundation tube should normally be 2-1/2″ to 3″ above the level line. The placement of the foundation tube should be an appropriate depth below the level line in order to maintain the 27-3/4" guardrail height from the edge of the shoulder.

If the slope drops off some distance (*X* ") from the edge of the shoulder to the tube location, as shown in **Figure 4**, the depth of the foundation tube should be reduced by *X* ″ in order to maintain the proper guardrail height. The top of the foundation tube will project *(X″*+ 2 1/2") to *(X″*+ 3") above the ground. In order not to exceed the AASHTO 4″ maximum projection above the ground, site grading will be necessary to assure that the "*X* ″ dimension would not be more than 1 1/2" to 1″ respectively.

Installing Posts 1 and 2 with Groundline Strut

Figure 5 shows the above ground details and **Figure 6** shows the section at post locations 1 and 2. Posts 1 and 2 may be installed with either 6'-0" long split foundation tubes (S730) without soil plates, solid 6'-0" long foundation tubes (E731) without soil plates, standard 5'-0" long foundation tubes (S735) with soil plates (SP600) or 4'-6" long foundation tubes (E735) with soil plates (SP600). **Figure** 7 shows the optional 5'-0" or 4'-6" foundation tubes with soil plates.

For the **6'-0" long split foundation tube**, fasten one 5/8" x 7-1/2" hex head bolt (B580754) and H.G.R. nut (N050) through the bottom hole of the foundation tube. *Do not over tighten and deform the tube*. The bolt is intended to stop the post from sliding all the way into the tube during installation.

Do not drive the foundation tube with wood post inserted. If the soil is penetrable so that the foundation tube does not deform, the foundation tube may be driven with an approved driving head. For non-penetrable soil, drill a 6" pilot hole and force the tube to the appropriate depth by impact or vibratory means with an approved driving head. The tube may also be installed by augering and backfilling if the contractor so prefers. The initial hole must be large enough to allow adequate room for proper compaction of the soil during backfill. *Care must be taken to carefully compact the backfill to prevent settlement or lateral displacement of the foundation tubes.* If rock is encountered, refer to appropriate State specifications. Guidelines will vary from State to State.

The top of the foundation tubes should not project more than 4" above the ground line when measured along a 5' cord, according to AASHTO specifications (see **Figure 4**).

The installation procedure for the **solid 6'-0" long foundation tubes** without soil plates is the same as that for the split foundation tubes.

The installation for the **standard 5'-0" long foundation tubes** with soil plates or the **standard 4'-6" long foundation tubes** with soil plates is shown in **Figure** 7. Fasten the soil plate to the foundation tube with two 5/8" x 7-1/2" hex head bolts (B580754) and H.G.R. nuts (N050) through the bottom holes of the foundation tubes. *Do not over tighten and deform the tubes.* These bolts attach the soil plate to the foundation tube and stop the post from sliding all the way into the tube during installation.

Insert the pipe sleeve (E740) into the 2 1/2" diameter hole near the base of the 5-1/2" x 7-1/2" x 45" wood post (P650) and install the post in the foundation tube at post location 1. Install the second 5-1/2" x 7-1/2" x 45" wood post in the foundation tube at post location 2, and fit the groundline strut (E780) between the two posts. Secure the post to each foundation tube with a 5/8" x 10" hex head bolt (B581004) and H.G.R. nut (N050) with a washer (W050) under both the bolt head and the nut. These bolts will serve to secure the posts and attach the groundline strut to the foundation tubes, as shown in **Figure 6**.

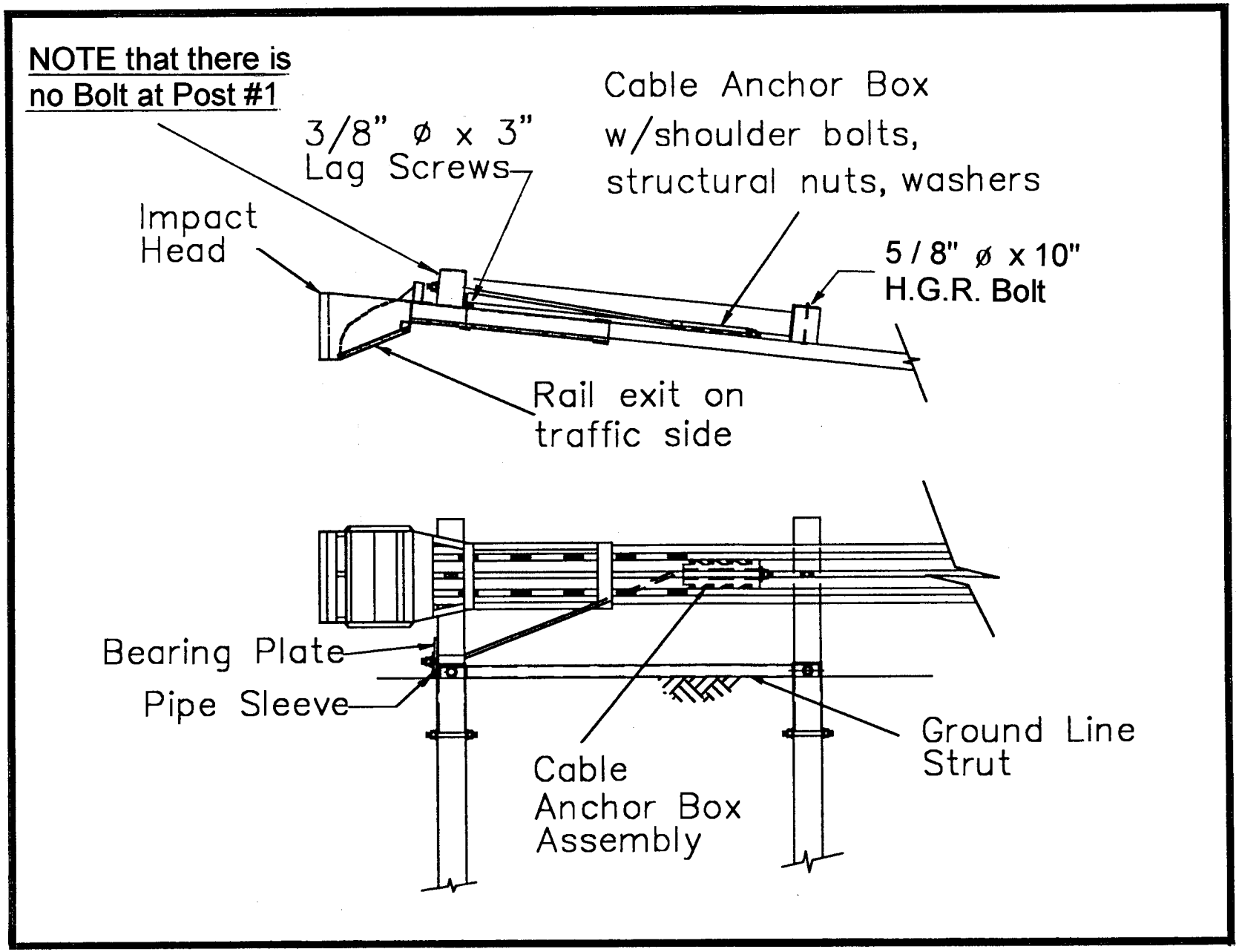

Figure 5. Above-Ground Details at Post Locations 1 and 2.

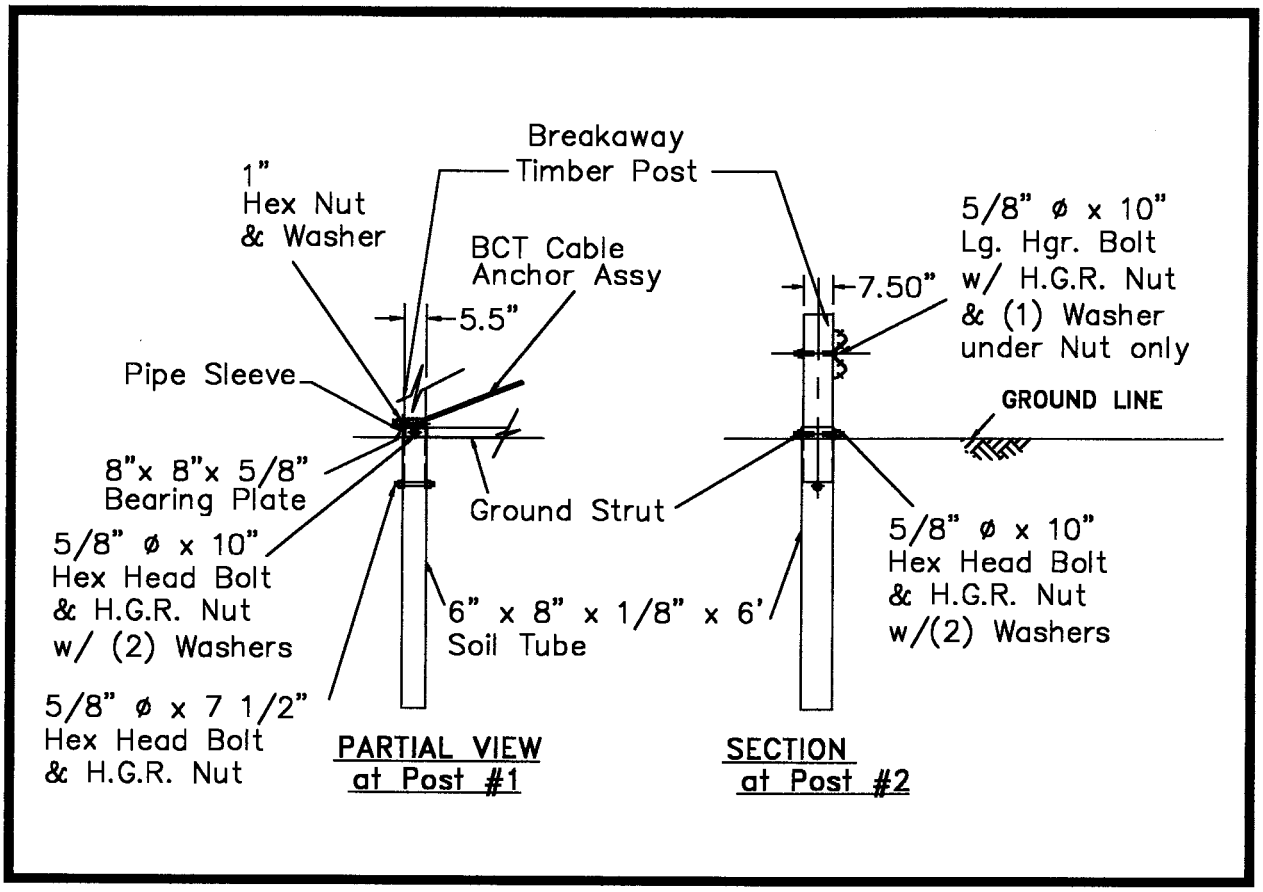

Note. The optional **6'-0" long split foundation tubes** may be substituted with either **solid 6'-0" long foundation tubes** without soil plates or standard **5'-0" or 4'-6" long foundation tubes** with soil plates.

Figure 6. Section at Post Locations 1 and 2.

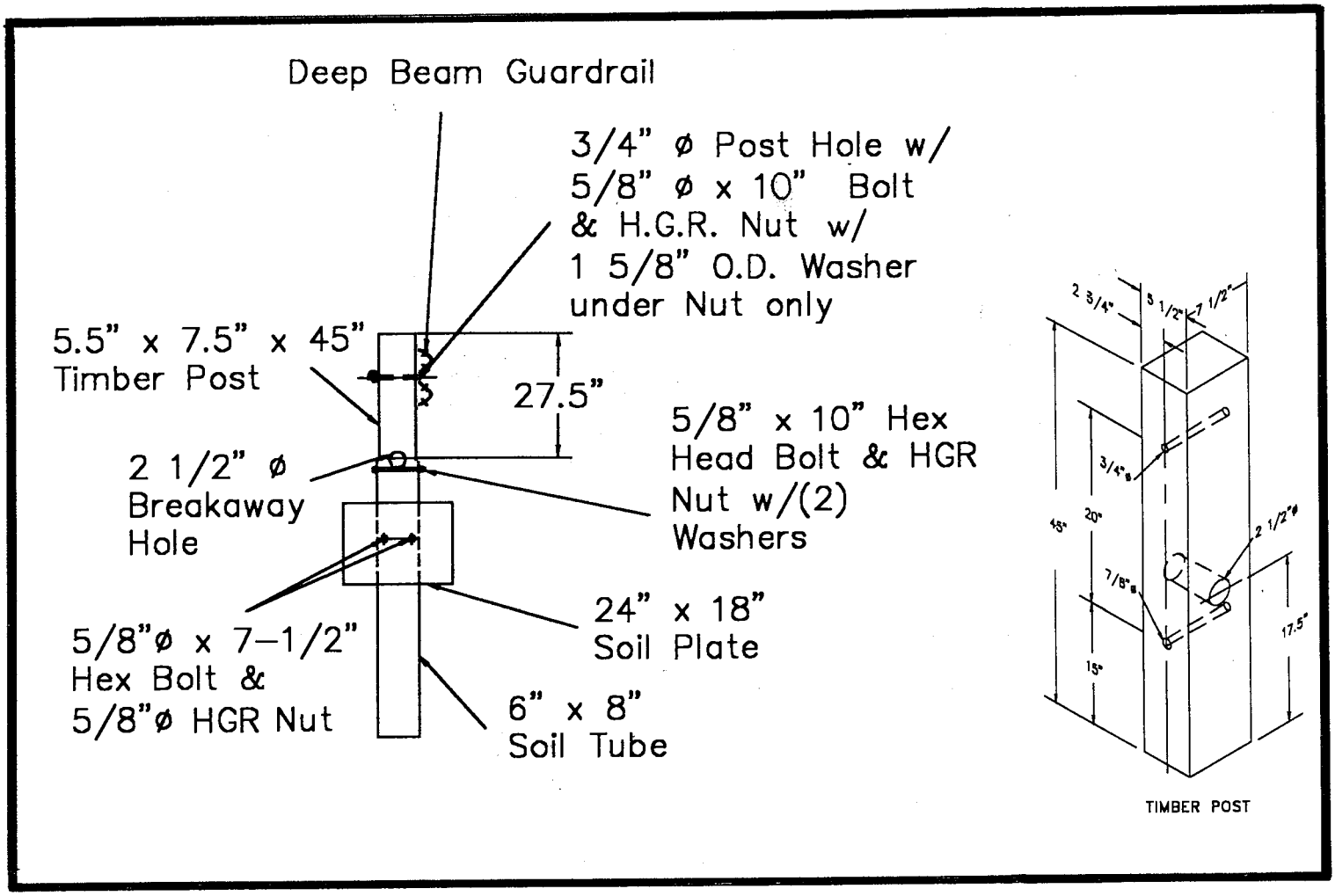

Figure 7. Optional 5'-0" or 4'-6" Foundation Tubes with Soil Plates

Installing Guardrail

The required offset is achieved by first splicing the guardrail panels together and then manually pushing the rails back. Shop curving or bending is not required.

Attach the standard 12'-6" W-beam guardrail section with 6'-3" post spacing (G1203) beginning at post 8 and spanning to post 6. Then attach the standard 12'-6" W-beam guardrail section with 4'-2" post spacing (F1304) which will span from post 6 to post 3. **Note that the rail is not bolted to post #3**. Attach the 12'-6" W-beam guardrail end section (F1303) to span from post 3 to 1. Note that the impact head must be placed over the rail prior to tightening the rail to post # 2. The rail is to be spliced with 5/8″ x 1-1/4″ H.G.R. bolts (B580122) and 5/8″ H.G.R. nuts (N050).

For ease of installation, it is recommended to have the eight 1/2" cable anchor bracket shoulder bolts (SB58A) and the cable anchor bracket (S760) attached to the W-beam guardrail end section prior to attaching the guardrail to the posts. See Section on "Installing Cable Anchor Bracket" for details.

The rails are to be attached to posts and blockouts at post locations 4 through 7 with 5/8″ x 18" H.G.R. bolts (B581802) and nuts (N050). **At post location 3, the rail is not bolted to the post**. The bolt only holds the blockout to the post. There is no blockout on posts 1 and 2, and the rail is attached to post 2 only with a 5/8″ x 10″ H.G.R. bolt (B581002). **Note that no bolt is used at post #1**. Be sure to place a 5/8″ flat washer (W050) on the backside of posts 2 through 7 under each nut (N050).

NOTE: After the blockout is attached, drive a galvanized steel 10d common nail through the block and into the post (toe nailed) to prevent rotation if the wood shrinks.

Installing Cable Anchor Bracket

For ease of installation, it is recommended to have the eight 1/2" cable anchor bracket shoulder bolts (SB58A) and the cable anchor bracket (S760) attached to the W-beam guardrail end section prior to attaching the guardrail to the posts. If this procedure is not followed, Post #2 may interfere with attaching the bracket.

The eight 1/2" cable anchor bracket shoulder bolts (SB58A) are attached to the W-beam guardrail end section with two 1-1/16" OD x 9/16" ID structural washers (W050A), one on each side of the guardrail, and a 1/2" structural nut (N055A). The shoulders of the bolts should be on the backside of the guardrail, away from traffic, as shown in **Figure 8**.

For ease of installation, attach the cable anchor bracket shoulder bolts to the rail "finger tight" only. Then align the slots on the cable anchor bracket (S760) with the shoulder bolts and tap the cable anchor bracket onto the shoulder portion of the bolts using a hammer. Tighten the bolts with a wrench when the bracket is in place. When installed properly, the welded plate on the cable anchor bracket should be toward Post #2, as shown in **Figure 9**.

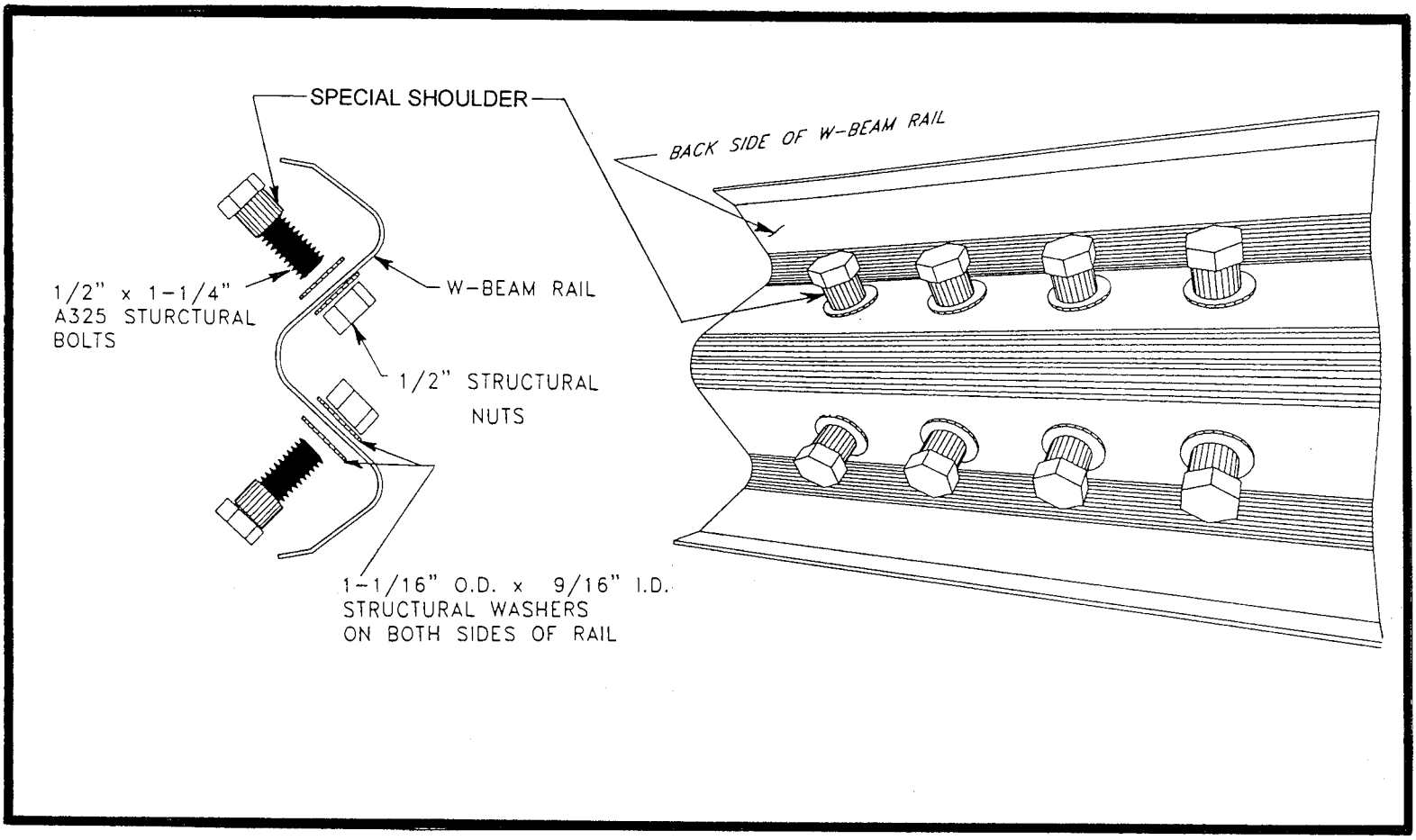

Figure 8. Installation of Cable Anchor Bracket Shoulder Bolts.

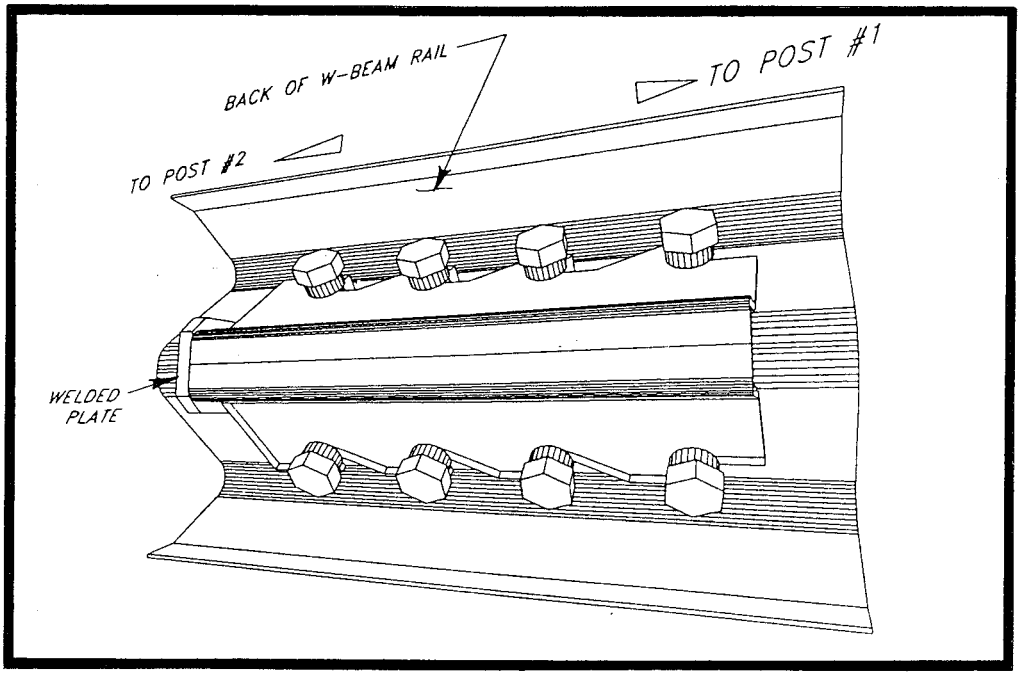

Figure 9. Installation of Cable Anchor Bracket.

Installing the FLEAT 350 Impact Head

The eight cable anchor bracket shoulder bolts and the cable anchor bracket should be attached to the W-beam guardrail end section prior to attaching the ***FLEAT 350*** impact head to the first post with lag screws.

Prior to tightening the rail to post # 2, place the impact head (F3000) with the guide chute over the end of the W-beam guardrail. **The exit slot will be toward the traffic side**. The impact head should be positioned so that the protruding tube is on the backside of the guardrail, away from traffic as shown in **Figure 2** and **Figure 5**. Slide the impact head forward until the post angle attachments on the impact head are aligned with the downstream side of the first post. This is the side facing post #2. Attach the impact head to the first post with two 3/8" x 3" lag screws (E350), one each for the top and bottom post angle attachments. A 1/4" pilot hole is required to avoid breaking the lag screw.

Note. It is recommended that the face of the impact head be delineated with an object marker that meets State specifications for better night visibility. However, the impact face object marker is not included as part of the shipped materials for the ***FLEAT 350*** unless specifically requested in the contract plans.

Installing Cable Assembly

Place the cable assembly (E770) through the cable anchor bracket and through the sleeve of post 1. Place the bearing plate (E750) at the base of post 1 with 5" dimension up and 3" dimension down. Place a nail over the bearing plate to prevent the plate from rotating. Secure both ends of the cable assembly with a 1" hex nut (N100) and washer (W100). While tightening cable, use a 2-lb hammer to tap the cable anchor bracket from the downstream end to ensure that it is securely interlocked with the bolts. Restrain the cable at the end being tightened to avoid twisting the cable.

Upon completion of the installation, the cable should be taut and the cable anchor bracket should be fully seated on the shoulder portion of the cable anchor bolts. *It is very important that the cable anchor bracket be fully seated on the shoulder portion of the cable anchor bolts.*

FLEAT 350 Installation Checklist

State:_____

Date:_____

Project #:_____

Location:_____

- ☐ The rail height is in accordance with the plans (generally 27-3/4″ above the edge of the shoulder).
- ☐ The rail at post #1 is placed at a straight flare (offset between 2'-6" & 4'-0") over the 37'-6" terminal length.
- ☐ The rail is not attached to the post at post location #3 or post location #1.
- ☐ The foundation tubes do not protrude more than 4″ above the ground line (measured by the AASHTO 5' cord method). Site grading may be necessary to meet this requirement.
- ☐ The bolts at the top of the foundation tubes are not over-tightened, deforming the walls of the tubes.
- ☐ The guide chute of the impact head is parallel to the top of the rail and the exit slot of the impact head is facing traffic.
- ☐ The two lag screws holding the impact head to post 1 are snug.
- ☐ The 8″ x 8″ bearing plate at post 1 is correctly positioned with the 5" dimension up & the 3" dimension down. The anchor cable is taut and correctly installed. A nail has been placed over the bearing plate to prevent rotation.
- ☐ The cable anchor bracket shoulder bolts are properly attached to the W-beam guardrail and the cable anchor bracket is fully seated on the shoulder portion of the bolts.
- ☐ Posts #1 and #2 are installed in foundation tubes and have the 2-1/2″ breakaway hole located parallel to the roadway with the bottom of the hole at the top of the tube.
- ☐ CRT posts at locations 3 through 7 have two 3-1/2″ breakaway holes (checked prior to installation) located parallel to the roadway with the center of the top hole located at the ground line.
- ☐ If the posts were augered, be sure the backfill material around the posts is compacted.
- ☐ No washers are used on the face of the rail except at the cable anchor bracket bolts.

Additional notes: _____

_____

Inspection performed by: _____

Repairing the *FLEAT 350*

Equipment Needed for Repair Operation

- Acetylene torch to cut off the damaged rail,
- S.A.E. wrench or socket sizes 9/16", 7/8", 15/16", 1-1/4", and 1-1/2",
- Vice grip or channel lock pliers,
- Sledge hammer,
- Post remover tool (see **Figures 10 and 11**),
- Other normal guardrail tools.

General Repair Procedures

After an end-on impact occurs with the ***FLEAT 350***, it will normally require replacement of the 12'-6" end section of rail and any other damaged rail section(s), any broken post(s) and potentially the impact head. For a traffic face impact, the damage will be to the downstream rail section(s) and associated posts.

The general step-by-step procedure for repairing a damaged ***FLEAT 350*** terminal is as follows:

(1) Check the impact head for damage.

(2) Check the cable anchor bracket and cable assembly for damage. The bearing plate, nuts, washers, cable anchor bracket, and the special cable anchor bracket shoulder bolts are rarely damaged.

(3) Check the number of broken posts and wood blockouts that need to be replaced, along with any damaged bolts. Inventory and pick up the reusable parts.

(4) Torch off the kinked rail near the outlet of the impact head. The impact head should be able to be removed by hand at this point. If not, the impact head is probably not reusable.

(5) Disconnect and remove the damaged rail from the posts.

(6) Remove the broken posts from the foundation tubes using one of the two post removal tools (see **Figures 10 and 11**) assembled from "off the shelf hardware" items. Pound the steel pipe or screw the lag screw into the top of the broken post stub and remove the remains of the broken post by pulling on the chain. Use a pry bar as a lever if necessary.

(7) Reinstall the system following the procedures listed in this manual.

Procedures Immediately Following an Accident (Temporary)

If no repair parts are readily available immediately following an accident, the following procedure should be used to provide temporary protection of the guardrail end. It should be noted that this repair is only for temporary purposes, and the anchor cable cannot be installed to provide tension in the rail for redirectional impacts.

(1) Remove damaged rail and impact head from the roadway or shoulder area.

(2) Using an acetylene torch, cut the kinked rail off at the outlet of the impact head and inspect the head for any damage.

(3) Remove the impact head by hand.

(4) Locate the first post downstream of any damaged rail and cut this rail off about 9″ in front of the post. If the post is at a splice, simply unbolt the damaged rail.

(5) Install the impact head on the rail and attach it to the post with lag bolts.

(6) Warning signs should be used where appropriate.

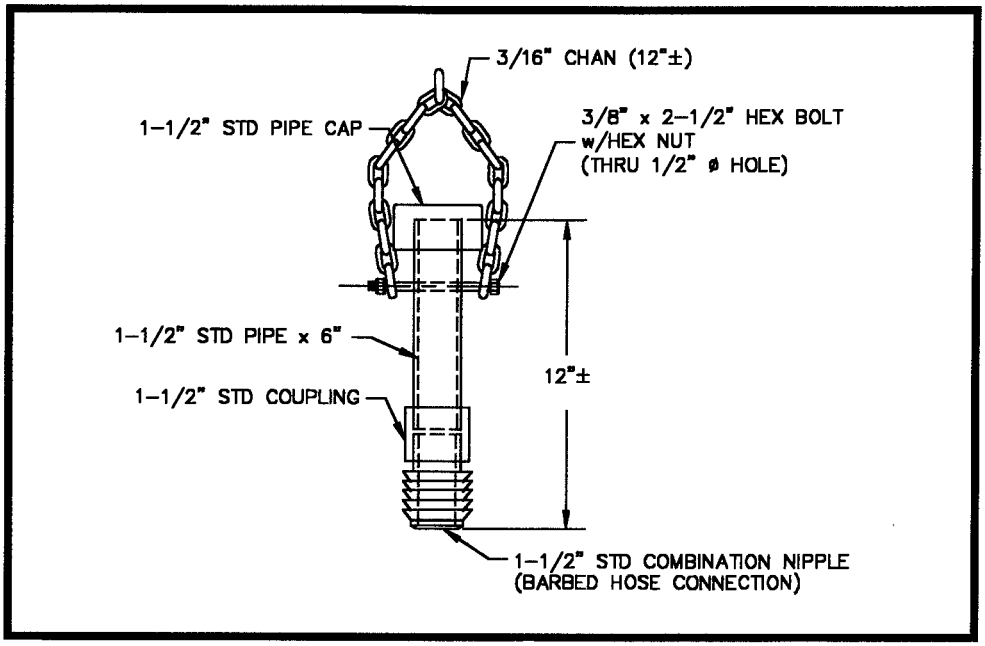

Figure 10. Wood Post Pulling Tool (Pipe Option)

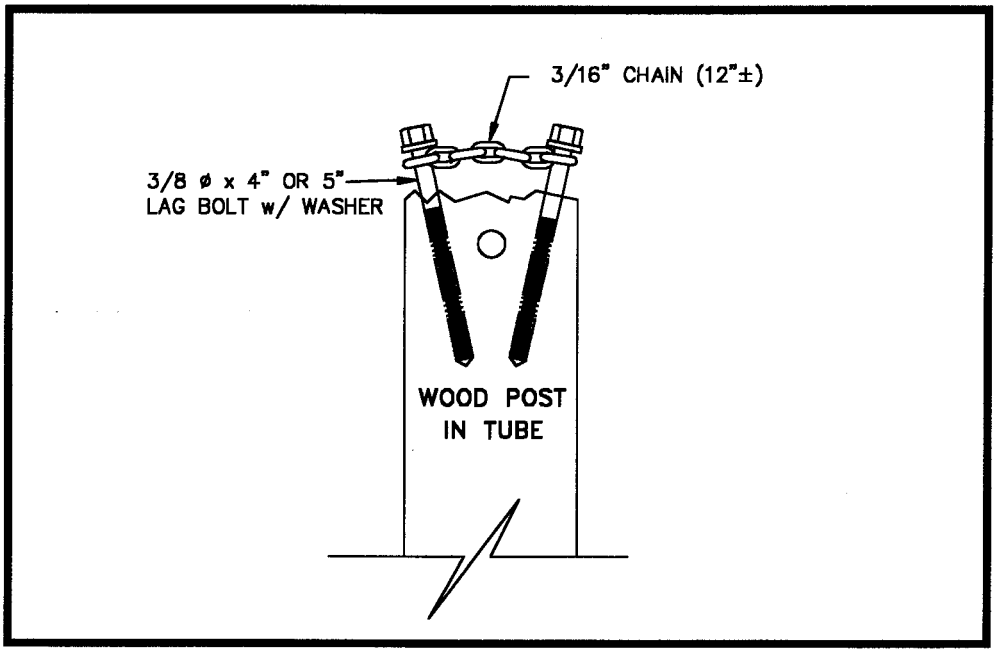

Figure 11. Wood Post Pulling Tool (Lag Screw Option)

X-LITE® TANGENT

NCHRP 350 TL-3 Redirective, Gating, End Terminal

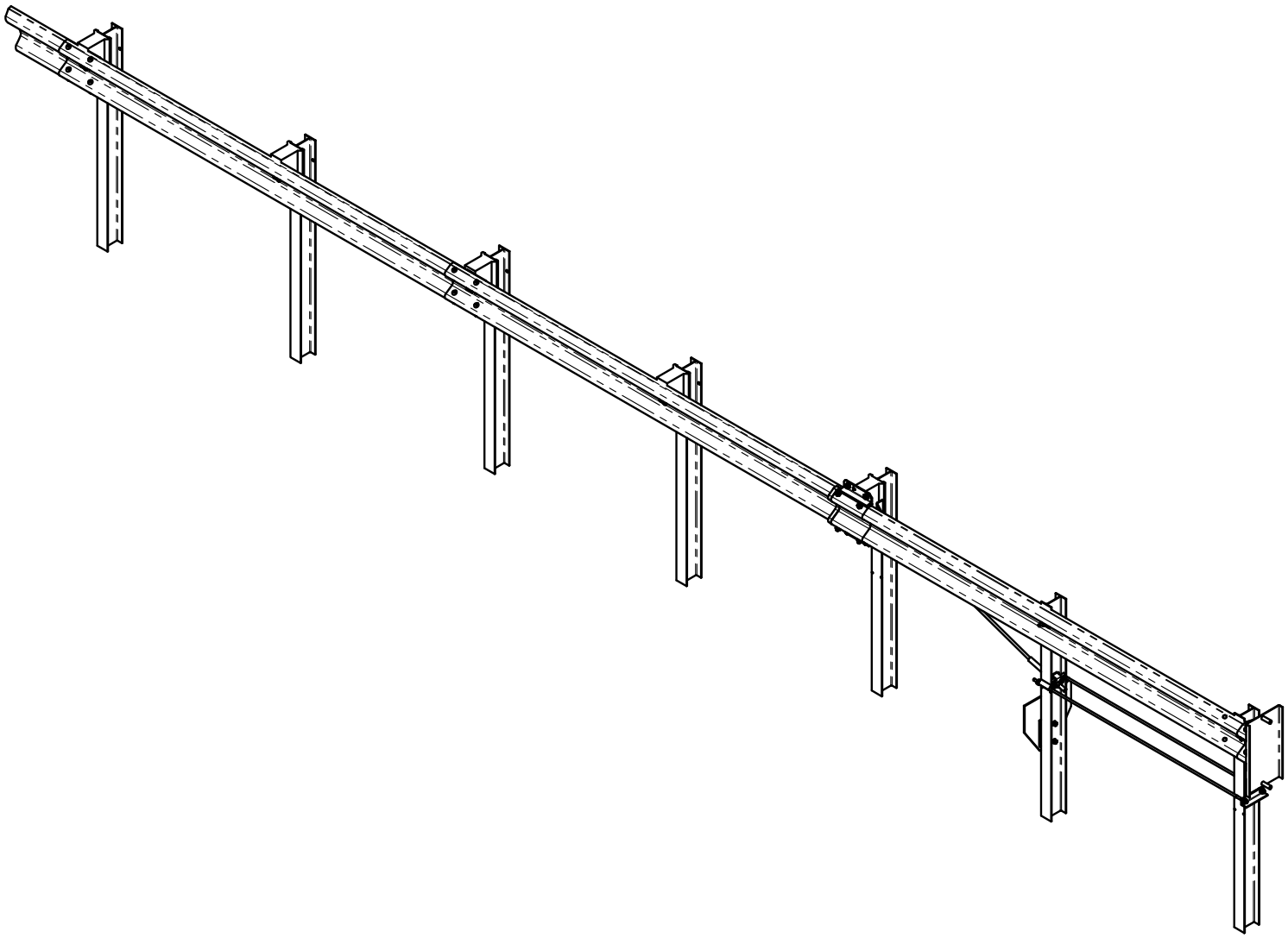

BARRIER SYSTEMS®
BY LINDSAY

Installation Manual

X-LITE TANGENT END TERMINAL

Preface ---------- 3
System Overview ---------- 3
Before Installation ---------- 3
Limitations and Warnings ---------- 3
Preparation ---------- 4
Soil Conditions ---------- 4
Before Starting ---------- 4
Required Tools ---------- 4
Limited Warranty ---------- 5
Parts Identification ---------- 6
Step 1 - Assembling Components ---------- 8
Step 2 - Post and Blockout Installation ---------- 10
Step 3 - Install Ground Strut Assembly ---------- 13
Step 4 - Hang Rails ---------- 14
Step 5 - Install Impact Head ---------- 17
Final Inspection Checklist ---------- 20

APPENDICES

Appendix A - System Configuration Drawings ---------- 21

Preface

The X-Lite Guardrail End Terminal Tangent System incorporates the latest roadside safety technologies and engineering processes.

As with any roadside safety device, the X-Lite System must be installed in accordance with the manufacturer's specifications to ensure proper performance. Thoroughly review and fully understand the installation instructions and product limitations before starting the installation. Do not start the installation without the proper plans and tools required.

System Overview

The X-Lite System is a re-directive, gating end terminal designed for shielding the ends of guardrail systems. The system offers exceptional vehicle control, energy absorbing capabilities in head on impacts, and is re-directive starting at post 3. The X-Lite is comprised of a head unit, specially designed crimped posts, tension rods, cable assembly, slider assembly, and other standard guardrail components.

Before Installation

Placement and use of the X-Lite System should be done in accordance with the guidelines and recommendations set forth in the "AASHTO Roadside Design Guide," FHWA memoranda, and other state and local standards.

Depending on the application and the circumstances at the site, installation should take an experienced two person crew with proper tools approximately two hours to complete.

The X-Lite System is a highly engineered safety device made up of a relatively small number of parts. It is available in both tangent and flared versions. Before starting installation ensure that one is familiar with the make up of the system that is being installed. Prior to installation, ensure that proper manuals and components are on site.

Limitations and Warnings

The X-Lite System has been rigorously tested and evaluated per the recommendations in the National Cooperative Highway Research Program Report 350 (NCHRP Report 350) guidelines for end terminals and crash cushions. The impact conditions recommended in NCHRP Report 350 are intended to address in-service collisions.

When properly installed and maintained, the system is capable of stopping, containing, and re-directing impacting vehicles in a predictable and safe manner under NCHRP Report 350 impact conditions. Vehicle impacts that vary from the NCHRP Report 350 impact conditions for gating, re-directive end terminals may result significantly different than those experienced in testing.

Vehicle impact characteristics different than or in excess of those encountered in NCHRP Report 350 testing (speed and angle) may result in system performance that may not meet NCHRP Report 350 evaluation criteria.

If you need additional information, or have questions about the X-Lite System, please call the Lindsay Transportation Solutions Customer Service Department at (888) 800-3691 (U.S. toll free) or (707) 374-6800.

Preparation
Before installing the X-Lite System, ensure that all materials required for the system are on site and have been identified.

Soil Conditions
The X-Lite has been designed to be installed in soil that meets or exceeds the AASHTO "standard soil" specification. If rock or stiff soil is encountered, the posts may be installed by augering and backfilling the hole. Extra care must be taken to prevent settlement or lateral displacement of the post. Backfill material shall be compacted to optimum compaction.

Before Starting
For all applications, begin the installation from the trailing / back end of the system where it joins the standard guardrail system at post 7.

Required Tools
The system uses standard tools required to install typical guardrail; the list below is a general recommendation.

- Post driver
- Tape measure
- String line
- Hammer
- Stakes
- Pry Bar
- Crescent Wrench
- Vice Grips or Clamps
- 1-5/8" [42 mm] Wrench
- ½" Ratchet
- 1-1/4" [32 mm] Socket
- Air Impact Wrench (Optional)
- Pick Axe
- Pipe Wrench or Large Pliers
- Torque wrench
  (capable of applying 60 ft. lbs. torque)

Note: The tools list is a general recommendation. Depending on the specific characteristics of the job site, more or less tools may be necessary.
The tools listed are for US/Imperial fasteners. If metric hardware is used, use metric equivalents for the hardware as required.

The picture of the X-Lite System above illustrates how the System is referred to throughout this manual.

Required Tools

STANDARD LIMITED WARRANTY

Lindsay Transportation Solutions, Inc. "LTS" (formerly Barrier Systems) has tested the impact performance of its barriers and crash cushion systems, and other highway safety hardware under controlled conditions, however, LTS does not represent nor warrant that the results of those controlled conditions would necessarily avoid injury to persons or property. LTS EXPRESSLY DISCLAIMS ANY WARRANTY OR LIABILITY FOR CLAIMS ARISING BY REASONS OF DEATH OR PERSONAL INJURY OR DAMAGE TO PROPERTY RESULTING FROM ANY IMPACT, COLLISION OR HARMFUL CONTACT WITH THE PRODUCTS OR NEARBY HAZARDS OR OBJECTS BY ANY VEHICLE, OBJECTS OR PERSONS.

LTS warrants that any product or component part manufactured by LTS will be free from defects in material or workmanship. LTS will replace free of cost any Product or component part manufactured by LTS that contains such a defect.

THE FOREGOING WARRANTY IS IN LIEU OF AND EXCLUDES ALL OTHER WARRANTIES NOT EXPRESSLY SET FORTH HEREIN, WHETHER EXPRESS OR IMPLIED BY OPERATION OF LAW OR OTHERWISE, INCLUDING BUT NOT LIMITED TO ANY IMPLIED WARRANTIES OF MERCHANTABILITY OR FITNESS FOR A PARTICULAR PURPOSE.

LTS' LIABILITY UNDER THIS WARRANTY IS EXPRESSLY LIMITED TO REPLACEMENT FREE OF COST (IN THE FORM AND UNDER THE TERMS ORIGINALLY SHIPPED), OR TO REPAIR OR TO MANUFACTURE BY LTS, PRODUCTS OR PARTS NOT COMPLYING WITH LTS SPECIFICATIONS, OR, AT LTS' ELECTION, TO THE REPAYMENT OF AN AMOUNT EQUAL TO THE PURCHASE PRICE OF SUCH PRODUCTS OR PARTS, WHETHER SUCH CLAIMS ARE FOR BREACH OF WARRANTY OR NEGLIGENCE. LTS SHALL NOT BE LIABLE FOR ANY INCIDENTAL, CONSEQUENTIAL OR SPECIAL LOSSES, DAMAGES OR EXPENSES OF ANY KIND, INCLUDING, WITHOUT LIMITATION, ANY SUCH LOSSES, DAMAGES OR EXPENSES ARISING DIRECTLY OR INDIRECTLY FROM THE SALE, HANDLING OR USE OF THE PRODUCTS FROM ANY OTHER CAUSE RELATING THERETO, OR FROM PERSONAL INJURY OR LOSS OF PROFIT.

Any claim by the Buyer with reference to Products sold hereunder for any cause shall be deemed waived by the Buyer unless LTS is notified in writing, in the case of defects apparent on visual inspection, within ninety (90) days from the delivery date, or, in the case of defects not apparent on visual inspection, within twelve (12) months from the said delivery date. Products claimed to be defective may be returned prepaid to LTS' plant for inspection in accordance with return shipping instructions that LTS shall furnish to the Buyer forthwith upon receipt of the Buyer's notice of claim. If the claim is established, LTS will reimburse that Buyer for all carriage costs incurred hereunder.

The forgoing warranty benefits shall not apply to (i) any Products that have been subject to improper storage, accident, misuse or unauthorized alterations, or that have not been installed, operated and maintained in accordance with approved procedures and (ii) any components manufactured by the Buyer.

W030587 Rev. 8 revised February 4, 2013

180 River Road • Rio Vista, CA 94571 • Tel. +1 (707) 374-6800 • Fax. +1 (707) 374-6801

Parts Identification

A Complete Bill of Materials for Systems and Kits Can be Found in Appendix A

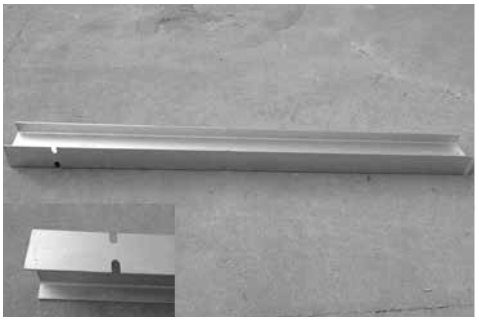

Crimp Post #1 (QTY. 1)
BSI-1310024-00

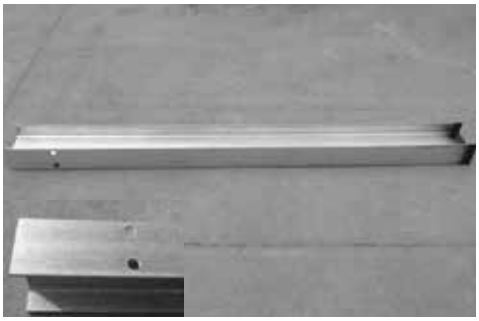

Crimp Post # 3 (QTY. 1)
BSI-1310027-00

Post II
BSI-1012086-00

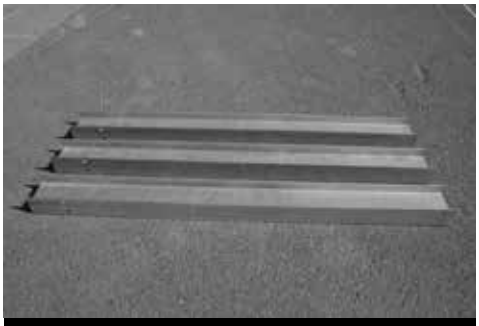

Line Post (QTY. 3)*
BSI-1012078-00

Impact Head
BSI-1012103-00

Slider Panel (Front)
BSI-1012093-00

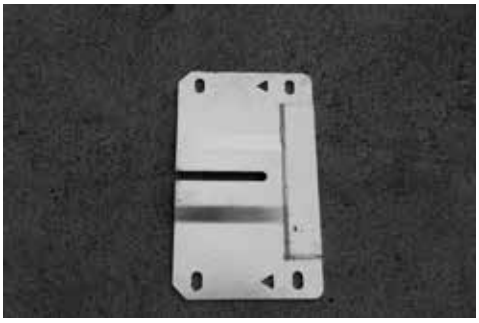

Slider Panel (Back)
BSI-1012096-00

Slider Bracket
BSI-1012090-00

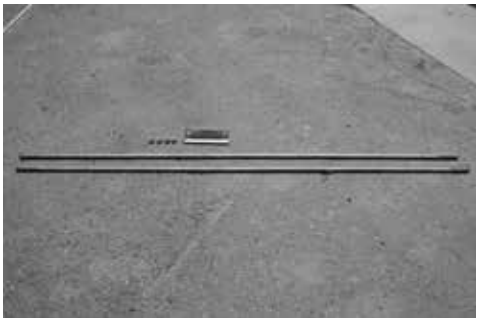

Ground Strut BSI-1012097-00 (QTY. 2), Nut 4001116 (QTY. 4), Angle BSI-1012098-00 (QTY. 1)

Cable Anchor Assembly
BSI-1012104-00

Shear Bolt Kits (8 Yellow Bolts per Kit)
K080123

Square Washer (Used on Post 1)
BSI-1102027-00

*** Denotes Shipped With Full System Only**

Parts Identification

A Complete Bill of Materials for Systems and Kits Can be Found in Appendix A

Blockouts (QTY. 4)*
B090534

Guardrail Bolts (QTY. 16)*
4001115

5/8" x 2" Guardrail Bolt (For Post 1 & 2)
(QTY. 2)* 2001758

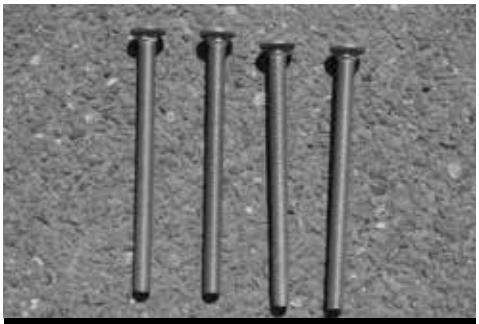

5/8" x 10" Guardrail Bolt (QTY. 4)*
2001840

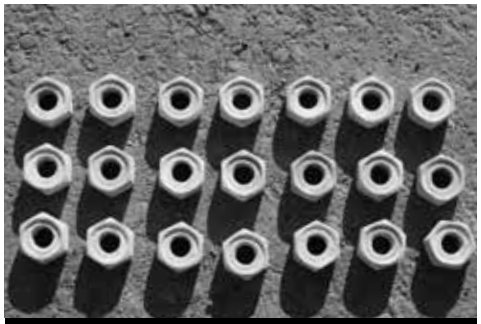

Guardrail Nut (QTY. 22)*
4001116

1" Washer (For Slider Panel-Back &
Cable Assy.)* (QTY. 2) 2001580

W-Beam Guardrail (QTY. 3)*
4000443

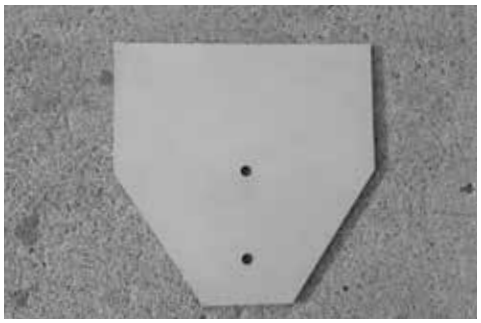

Soil Plate
BSI-1312100-00

5/8" x 3 ½" Bolt (Used on Soil Plate)
(QTY. 2) 2000220

5/8" Washer (Used on Soil Plate)
(QTY. 4) 2001636

5/8" Nut (Used on Soil Plate)
(QTY. 2) 2000312

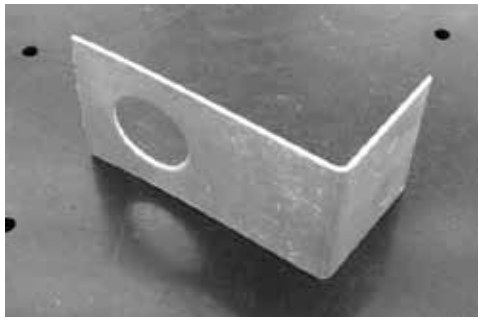

L-Bracket
(used on cable at Post 2) BSI-1303005-00

*** Denotes Shipped With Full System Only**

Step 1 – Assembling Components

Components required:
- (1) Post II – BSI-1012086-00
- (1) Soil Plate – BSI-1312100-00
- (2) W-Beam – 4000443
- (1) Slider Panel (Front)– BSI-1012093-00
- (1) Slider Bracket – BSI-1012090-00

Hardware Required:
- (2) 5/8” x 3 ½” Bolt - 2000220
- (8) 5/8” x 1 ¼” Guardrail Bolt - 4001115
- (4) 5/8” Washer - 2001636
- (2) 5/8” Nut - 2000312
- (8) 5/8” Guardrail Nut - 4001116

Some components require assembly and it is recommended that this step be completed prior to the start of the system assembly.

Notes:

Post II Assembly:

1. Attach the soil plate to the trailing / back side of Post II using two (2) 5/8” x 3 ½” bolts, washers (4), and nuts (2). The trailing / back end of the post is identified by the open slots on the top of the post.

   The bolts should be installed from back to front so that the head of the bolts rests on the soil plate.

   Depending on your post driver equipment, Post 2 may need to be partially driven before this step can be accomplished.

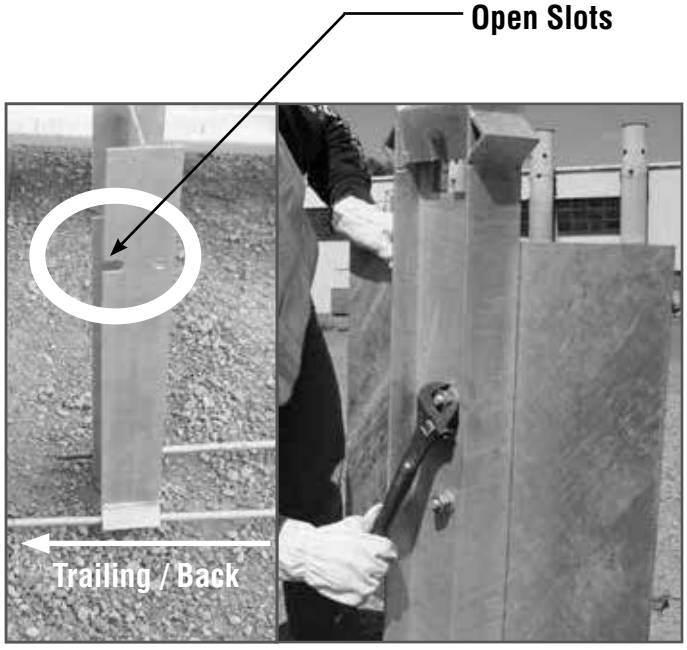

Attach Soil Plate to Post II

Slider Bracket and Panel Assembly:

2. Attach the slider bracket to the inside of the approach / front end of rail 2 using four (4) 5/8" x 1 ¼" guardrail bolts.

   Bolts should be installed with the bolt head on the outside and the nuts the inside.

Note: **When properly installed, a portion of the bracket will stick out of the rail.**

Attach Slider Bracket to Rail 2.

3. Attach the Slider Panel (Front) to the outside of the trailing / back end of rail 1 using four (4) 5/8" x 1 ¼" guardrail bolts.

   Bolts should be installed with the bolt head on the inside and the nuts on the outside.

   The angled portion of the Slider Panel should extend beyond the end of the rail and should face the trailing / back of the system when assembled in step 18.

Attach Slider Panel (Front) to Rail 1.

Angled Portion Extends Beyond the End of the Rail.

Step 2 – Post and Blockout Installation

Components required:
- (1) Crimp Post w/ Slots (Post 1) - BSI-1310024-00
- (1) Crimp Post w/ Holes (Post 3) - BSI-1310027-00
- (1) Post II Assembly with Soil Plate
- (3) Line Post – BSI-1012078-00
- (4) Blockout – B090534
- (1) Slider Panel (Back) – BSI-1012096-00

Hardware Required:
- (2) 5/8” x 10” Guardrail Bolt - 2001840
- (2) 5/8” Guardrail Nut - 4001116
- (1) 1” Washer - 2001580

Always start the installation at the existing w – beam barrier and assemble the system toward the impact head.

When driving the posts into stiff/rocky soil, place close attention not to bend the posts. If rock or stiff soil is encountered, the posts may be installed by augering and backfilling the holes. Extra care must be taken to prevent settlement or lateral displacement of the post. Backfill material shall be compacted to optimum compaction.

4. Begin by running a string line from the existing posts in a tangent position.

Note: The X-LITE can be installed with an offset of 0 - 24” (0 - 600 mm) over the length of the system.

Note: **The front of posts 3-6 will be 7 5/8” (195mm) from the backside of rails 2 and 3 as blockouts are used. Posts 1 and 2 do not require blockouts and will align with the backside of rail 1. Post 3 requires up to an additional 2” (50mm) offset away from the rail to allow space for the slider assembly. (See Step 5.)**

Notes:

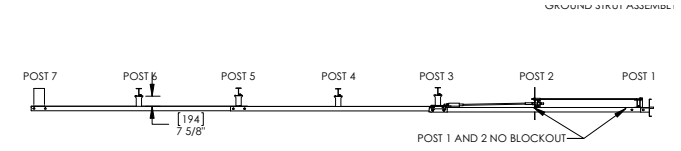

Post Identification

Existing Trailing / Back Guardrail

Post Layout

5. Begin installing the posts at standard highway post spacing, 75” (1905mm) and post height, 28 1/4” (720mm) or 31 3/4” (805mm).. Post spacing and post height are found on drawing BSI-1012105-00 in Appendix A.

Post 4-6: Line Posts

Note: if you are installing a 50 FT. system, the systems will have an additional 2 posts and an additional section of guardrail. Please reference Appendix A for detail of a 50 FT. system.

Post 3: Crimped Post

Offset Post 3, up to 2” (50mm) back from the string line to allow sufficient space for the slider bracket assembly.

Post 3 is identified by the post having a crimp and holes on one side of the post only. These holes are used to mount the blockout and slider panel (back) on a later step. In addition, Post 3 can be easily identified by having black paint near the bottom.

Post 2: Post II Assembly with Soil Plate

Soil Plate should be on the trailing / back side of the system.

Post 2 does not require a blockout, therefore, align the post with the backside of the rail. Position the outside edge of the post roughly 8” (200mm) from the string line on the rail side of the string.

Depending on your post driver equipment, it may be necessary to partially drive Post 2 prior to attaching the Soil Plate. Begin to drive Post 2 approximately 18” (450mm), more if necessary. If the post is driven more than 18” (450mm) it will be necessary to use a pick ax or other digging tool to remove some of the soil in order to install the soil plate.

Once the soil plate is installed, continue driving the post to the desired height.

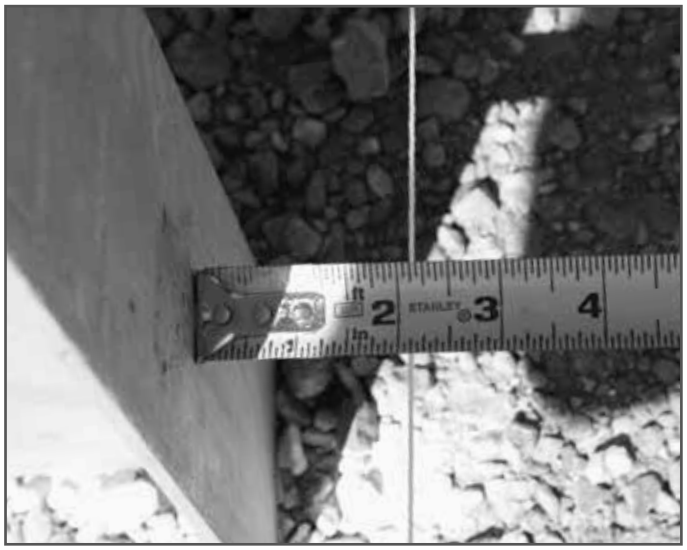

Post 3 Offset

Drive Post 2

Post 1: Crimped Post

Post 1 does not require a blockout, therefore, align the post with the backside of the rail. Position post roughly 2" (50mm) from the string line on the rail side of the string.

Post 1 is identified by the post having a crimp and slots instead of holes. These slots are used to bolt the guardrail on a later step. In addition, Post 1 can be easily identified by having yellow paint near the bottom.

6. Install blockouts on posts 3-6. Blockouts at posts 3 and 5 must be bolted on before hanging the rails.

7. At post 5, attach the blockout using the 5/8" x 10" bolt. Secure blockout using the approach / front hole on the post. The rail does not attach at post 5.

   See diagram below for post identification.

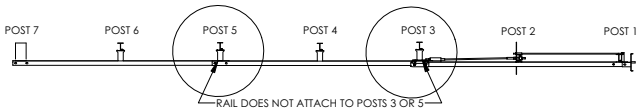

8. At post 3, attach blockout and slider panel (back) using the 5/8" x 10" bolt and 1" washer. The slot on the slider panel should point toward the front of the system. Secure blockout using the approach / front hole on the post.

   Blockouts at posts 4 and 6 are secured when the rail is bolted to the posts.

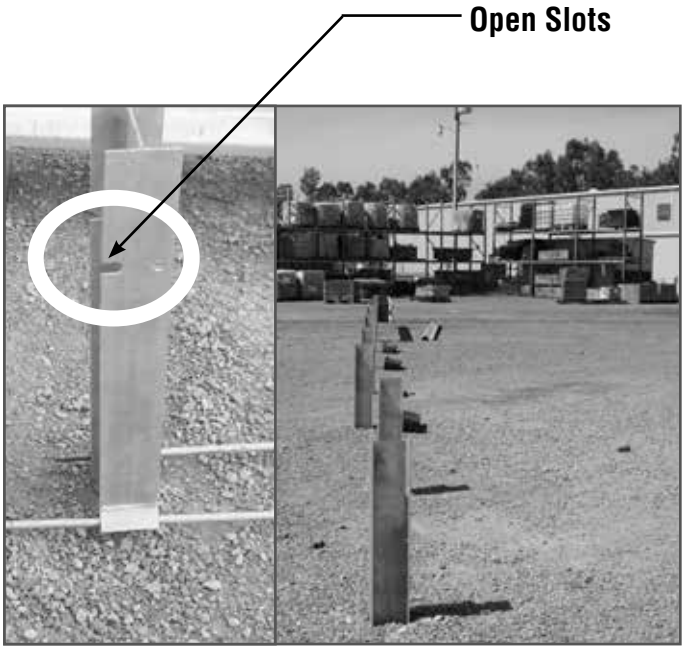

Installed Posts

Install Blockout at Post 5

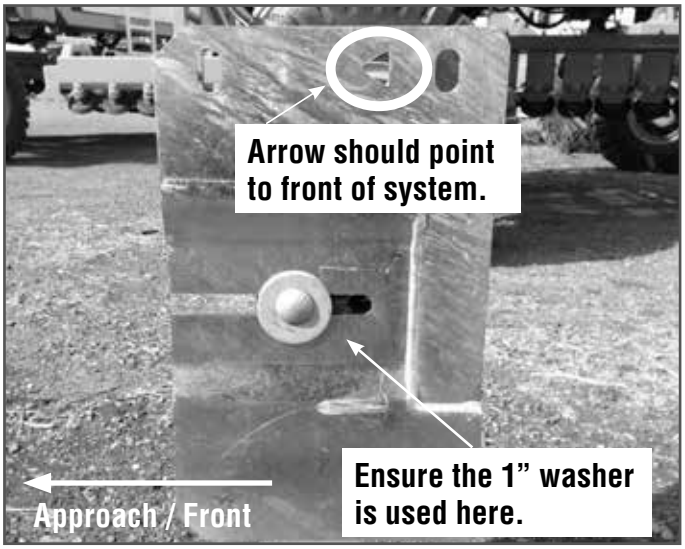

Slider Panel (Back) and Blockout on Post 3

Step 3 – Install Ground Strut Assembly

Components required:
- (2) Ground Strut Tension Rods – BSI-1012097-00
- (1) Ground Strut Angle – BSI-1012098-00

Hardware Required:
- (4) 5/8” Guardrail Nut - 4001116

9. Install ground strut tension rods between posts 1 and 2 by sliding the rods through the openings on the bottom of post 2.

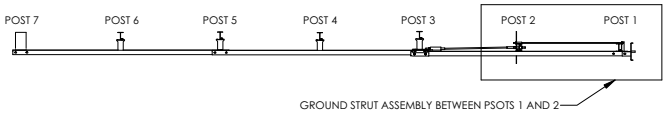

10. Secure the rods at post 1 by passing the rods through the small piece of angle with the angle sitting flush on the ground, just above the crimp on the post.

    The small piece of angle will sit flush with the ground on 28” systems only. On 31” height systems, the small piece of angle will sit approximately 3” (75mm) off the ground.

11. Tighten the rods so that there are equal amount of threads exposed at both ends of the rods.

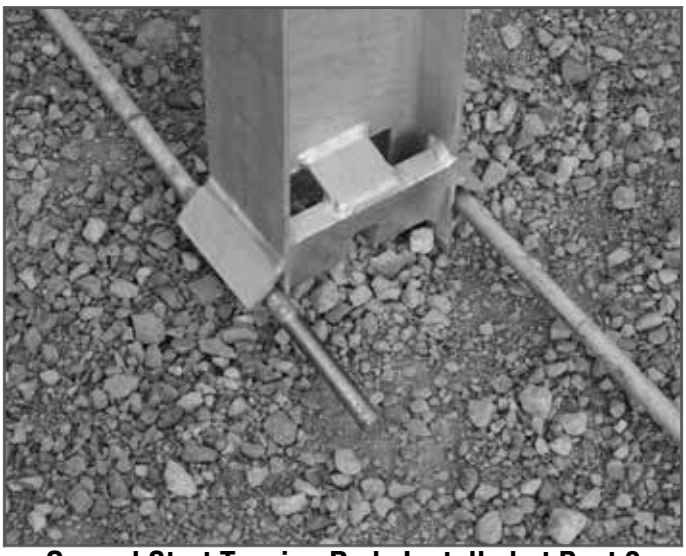

Ground Strut Tension Rods Installed at Post 2

Ground Strut Tension Rods Attached at Post 1

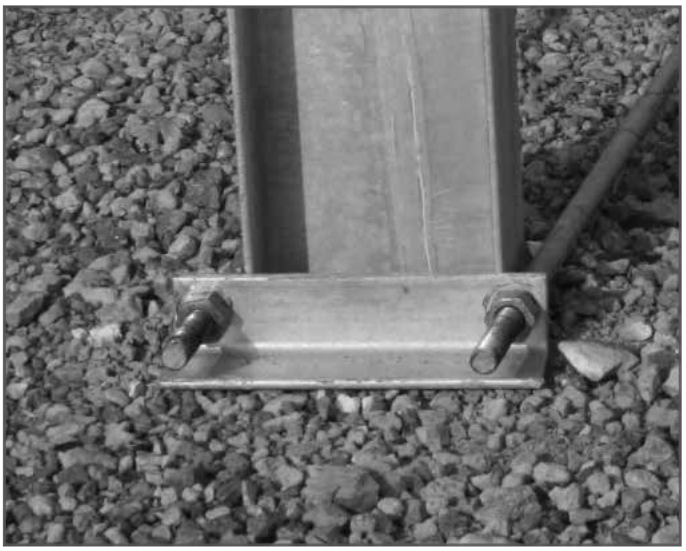

Nuts Tightened on Ground Strut Tension Rods

Step 4 – Hang Rails

Components required:
- (3) W-Beam Guardrail - 4000443**

Hardware Required:
- (2) 5/8” x 10” Guardrail Bolt -2001840
- (4) 5/8” x 1 ¼” Guardrail Bolt - 4001115
- (2) 5/8” x 2” Guardrail Bolt - 2001758
- (16) Shear Bolts – K080123 (Kit of 8; 2 Required)
- (5) 5/8” Guardrail Nut - 4001116
- (1) 5/8” Nut - 2000468
- (1) Square Washer – BSI-1102027-00

*If installing **a 50 ft system**, the system uses 4 sections of rail in stead of 3.*

*If you are attaching to **an MGS rail system**, a transition guardrail panel is necessary.*

*Please reference **Appendix A for 50 ft. or MGS system** details.*

***Note:* For the system to telescope properly, the forward most guardrail panel should always be on the outside.**

12. Before installing rail 3 ensure that the blockout at post 5 has already been bolted on. Attach rail 3 using the 5/8” x 10” bolt at post 6, pass bolt through the approach / front hole of post.

***Note:* Rail 3 is not attached to Post 5**

13. Splice rail 3 with the existing rail using the special yellow shear bolts. **DO NOT USE AN AIR IMPACT WRENCH TO TIGHTEN SHEAR BOLTS.**

    Ensure that the 10” bolt used secure the rail and blockout passes through both sections of guardrail, blockout and post.

Notes:

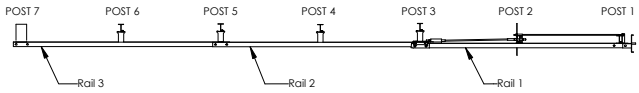

Post Identification

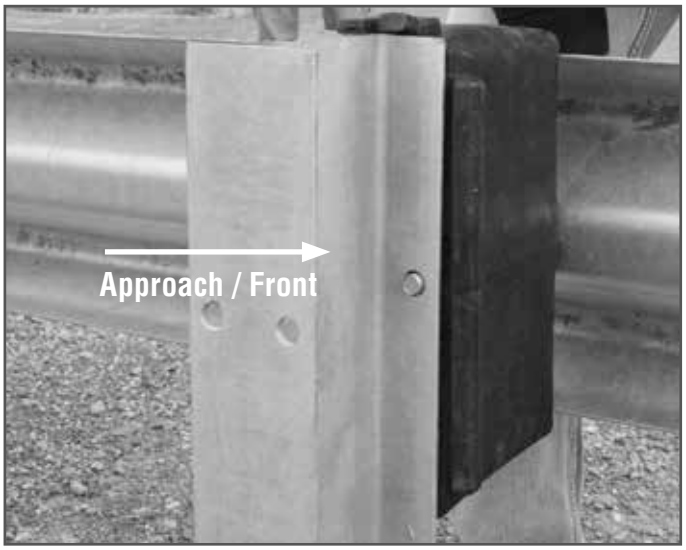

Attach Rails to Posts

Shear Bolts at Rail 3 and 4 Connection

14. Before installing rail 2 ensure that the blockout and slider panel (back) at post 3 has already been bolted on. Attach rail 2 using the 5/8" x 10" bolt at post 4, pass bolt through the approach / front hole of post.

Attach Rail 2 at Post 4

15. Splice rail 2 with rail 3 using the special yellow shear bolts. The rails do not attach to post 5. **DO NOT USE AND AIR IMPACT WRENCH TO TIGHTEN SHEAR BOLTS.**

Shear Bolts at Rail 2 and Connection

16. Attach rail 1 using the 5/8" x 2" guardrail bolt at post 2, pass bolt through the trailing / back slot of post.

17. Connect rails 1 and 2 using 5/8" x 1 ¼" guardrail bolts by connecting the slider panel assembly (front and back parts together).

    Ensure that the angled portion of the Slider Panel points toward the trailing / back end of the system.

Connect Rails 1 and 2 at Slider Assembly

18. Install the bolts from back to front with the nuts on the front side.

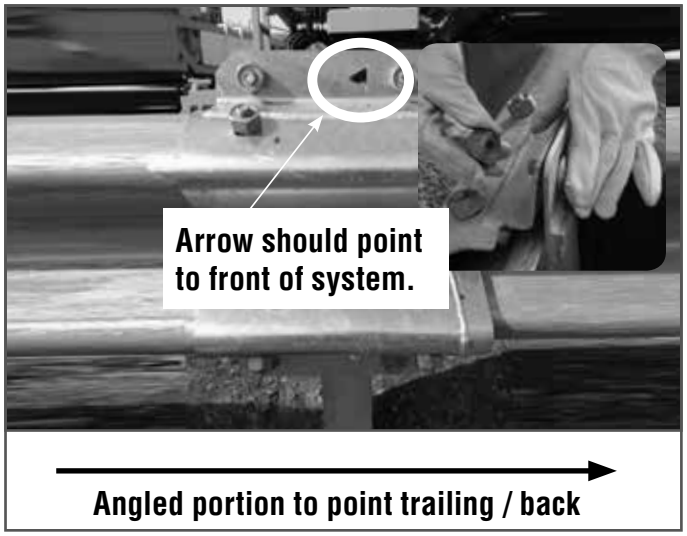

Slider Panel Assembly Installed

19. Attach rail 1 to post 1 using the 5/8” x 2” bolt and square washer, pass bolt through the approach / front slot of post.

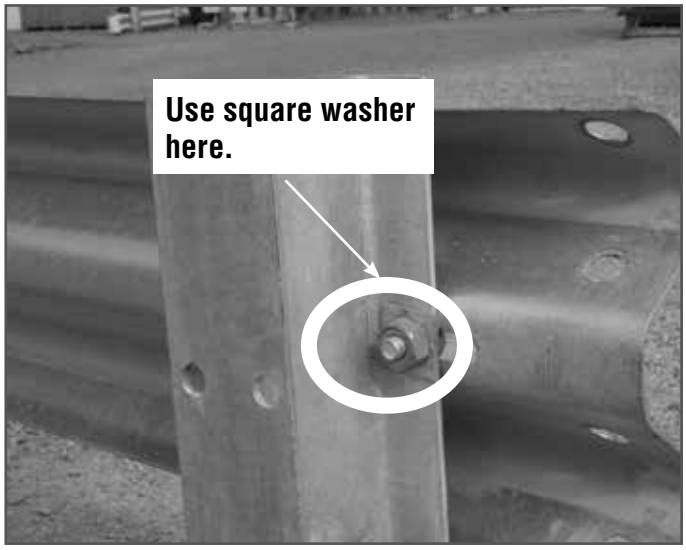

Attach Rail 1 at Post 1

All Rails Installed

Step 5 – Install Impact Head

Components required:
- (1) Impact Head – BSI-1012103-00

Hardware Required:
- (4) 5/8” x 1 ¼” Guardrail Bolt - 4001115
- (4) 5/8” Guardrail Nut - 4001116

20. Install Impact Head to the approach / front end of rail 1 using 5/8” x 1 ¼” guardrail bolts.

    Place Impact Head on the outside of the rail.

21. Install bolts from outside in with nuts on the inside.

Notes:

Install Impact Head at the End of Rail 1

Impact Head Installed

Step 6 – Install Cable

Components required:
- (1) Cable – BSI-1012104-00
- (1) 1” Washer - 2001580
- (1) L-Bracket - BSI-1301005-00

The cable is attached to the bottom of post 2 and at the slider bracket at post 3.

22. Begin to install the cable by passing the threaded end through the slot at the bottom of post 2.

23. Thread the nut so that 1” of the threads are protruding.

    Ensure to install the small L-Shaped bracket and round washer included with the cable. This bracket and washer are critical components and help keep the cable engaged in the slot.

    Proceed to thread the nut while not exposing any threads. This will ensure you can achieve the required to torque for the cable nut in a subsequent step.

Notes:

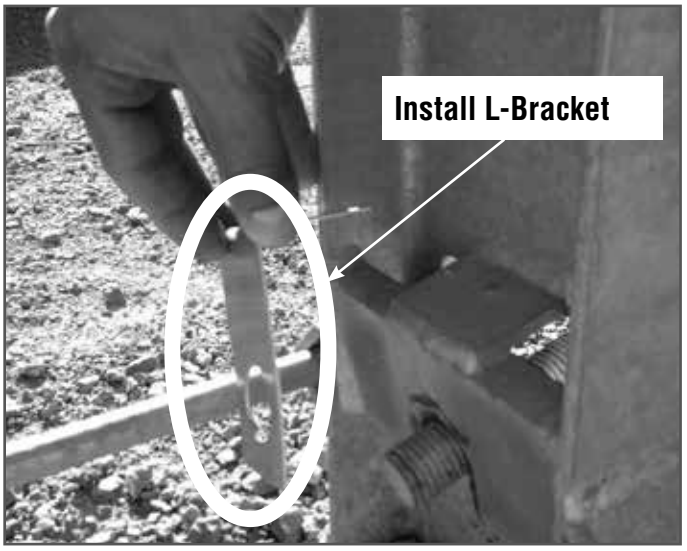

Install Cable at Post 2

L-Bracket installed at Post 2 Prior to Tightening

24. Pass the other end of the cable through the slider bracket at post 3.

    Install the nut. Tightening of the cable should be done at the bottom of Post 2 in the following step.

Install Trailing / Back End of Cable Through Bracket at Post 3

25. Tighten the cable nut at Post 2. It will be necessary to use a pipe wrench or large pliers on the backside of the cable to hold it in place while tightening. If the cable is not held in place with a pipe wrench or large pliers, it will spin while you attempt to tighten the cable and you will not be able to tighten it.

    Apply approximately 60 FT-Lb torque. Continue to tighten the cable nut until the cable is tight and the approximate torque is achieved.

    When tightening, ensure that the L-Bracket does not shift, turn and move out of position.

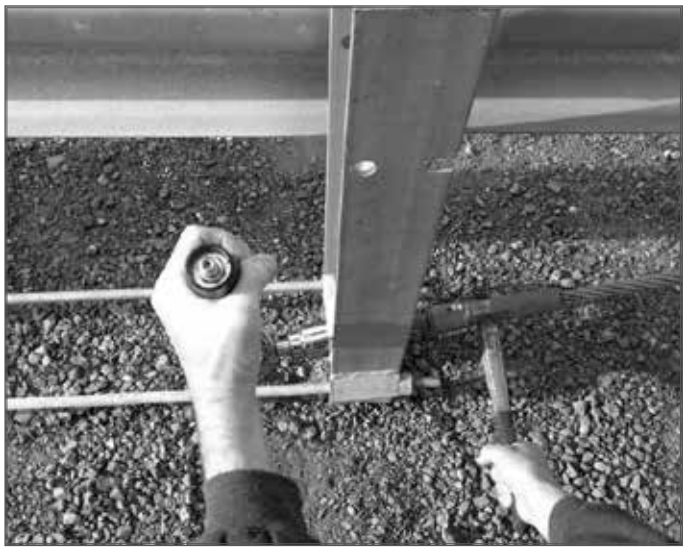

Torque cable nut to 60 ft.-lb. at Post 2

Note: **Standard BCT cables used on other systems may not require a specific torque on the cable nuts. The X-LITE® Tangent system requires a tensioned cable to maintain engagement in the slot on Post 2.**

If a torque wrench is not available, use the following method to ensure cable is adequately tensioned:

Tighten cable nut until a maximum 1/2" cable deflection is measured at the midpoint when pressure is applied by hand.

Cable Installed

Final Inspection Checklist

Inspection Date	Inspection By:	Item
		Post 1 uses slotted holes
		Post 3, uses standard post holes
		Rail bolted at posts 1, 2, 4 and 6 only (7, 8 for 50 ft. system)
		Rails not bolted to posts at Posts 3 and 5
		Square washer used at Post 1
		Post 2, rail bolted using trailing / back slot on post
		Posts 1, 4, 6, rails bolted using approach / front hole on posts
		Rails 3 and 4 spliced using special yellow shear bolts
		Rails 2 and 3 spliced using special yellow shear bolts
		At Post 7, 10" bolt passes through both guardrail sections, block-out and post.
		Slider assembly properly assembled with bolts from back to front with nuts on the outside
		Angled position of Slider panel points toward the trailing / back end of the system.
		Arrows on slider should point toward the front of the system
		Cable bracket and washer installed on cable at Post 2
		Approximately 60 ft.-lb. torque applied to cable nut at Post 2
		No blockout on Post 1 or Post 2
		Tangent installation or with allowable offset from 0 - 24” (0 - 600mm) over length of the system

Appendix A - System Configuration, 37’ 6”

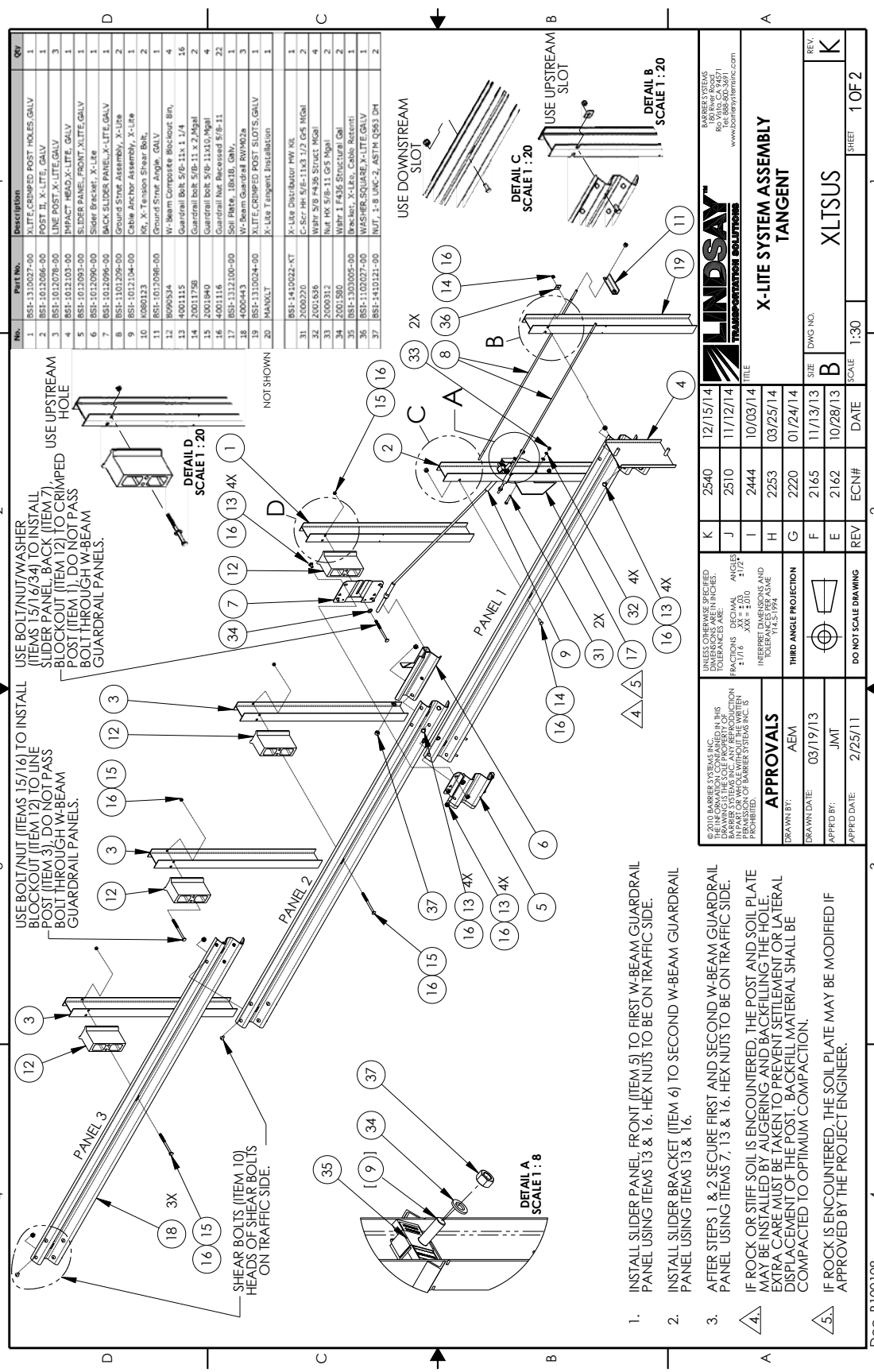

Appendix A - System Configuration, 37’ 6”

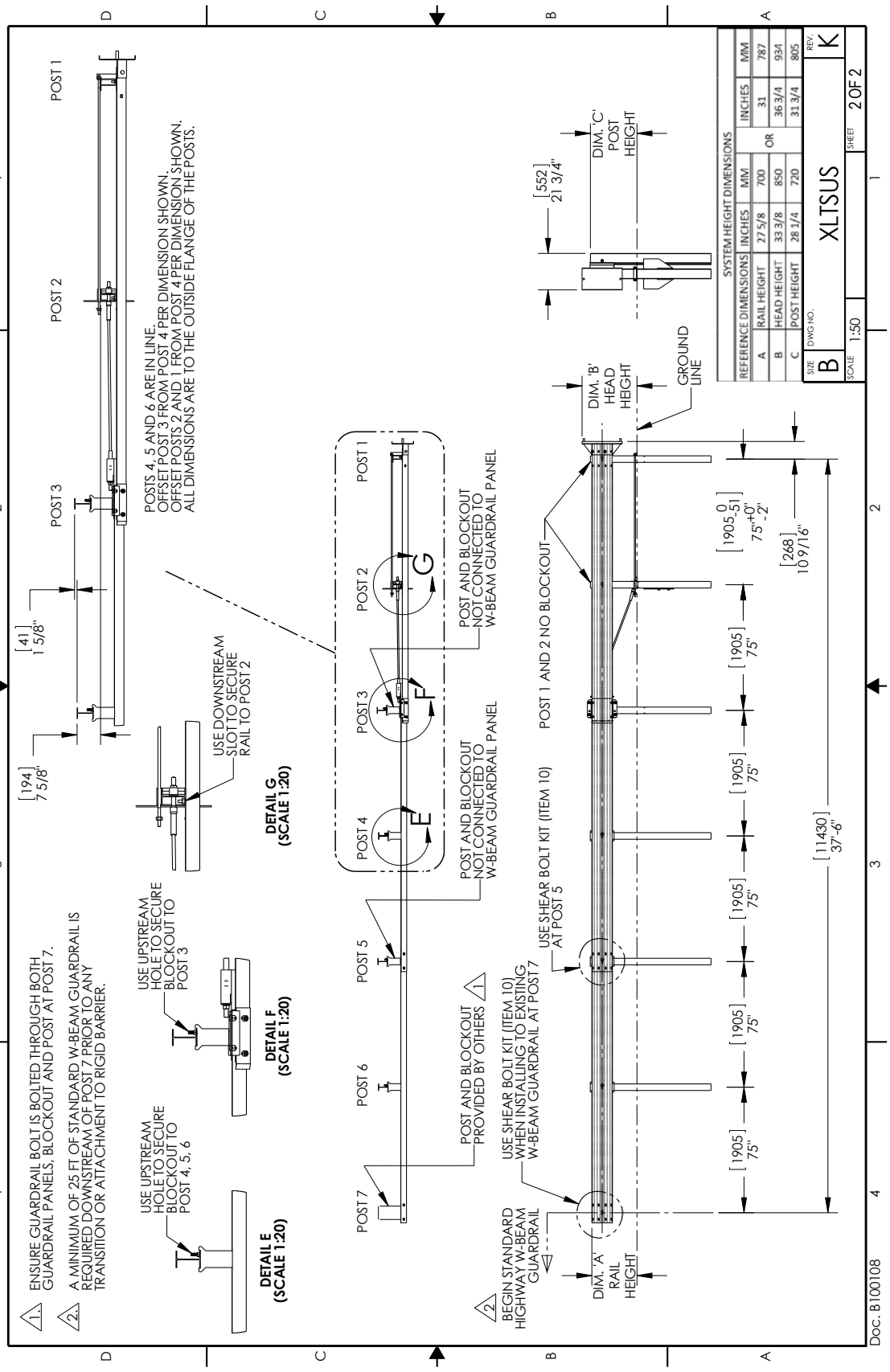

LINDSAY™ TRANSPORTATION SOLUTIONS | BARRIER SYSTEMS® BY LINDSAY | RAILROAD PRODUCTS BY LINDSAY | SNOLINE™ BY LINDSAY

Lindsay Transportation Solutions Sales and Services, Inc.
180 River Road • Rio Vista, CA 94571 • +1 707.374.6800 U.S. Toll Free: 888.800.3691 • www.barrriersystemsinc.com

Installation manual for the X-LITE Tangent System are subject to change without notice to reflect improvements and upgrades.
Additional information is available from Lindsay Transportation Solutions Sales and Services, Inc. © Lindsay Transportation Solutions, Inc.

BARRIER SYSTEMS

A LINDSAY TRANSPORTATION SOLUTIONS COMPANY

X-Tension™

Redirective, Non-Gating Guardrail End Terminal

- Contractor Friendly
- Simple Installation
- Meets NCHRP 350 TL-3

X-Tension™ Redirective, Non- Gating Terminal

1 IMPACT HEAD
2 SOIL ANCHOR
3 CABLES
4. X-TENSION POSTS
5. STANDARD POSTS
6. STANDARD GUARDRAIL

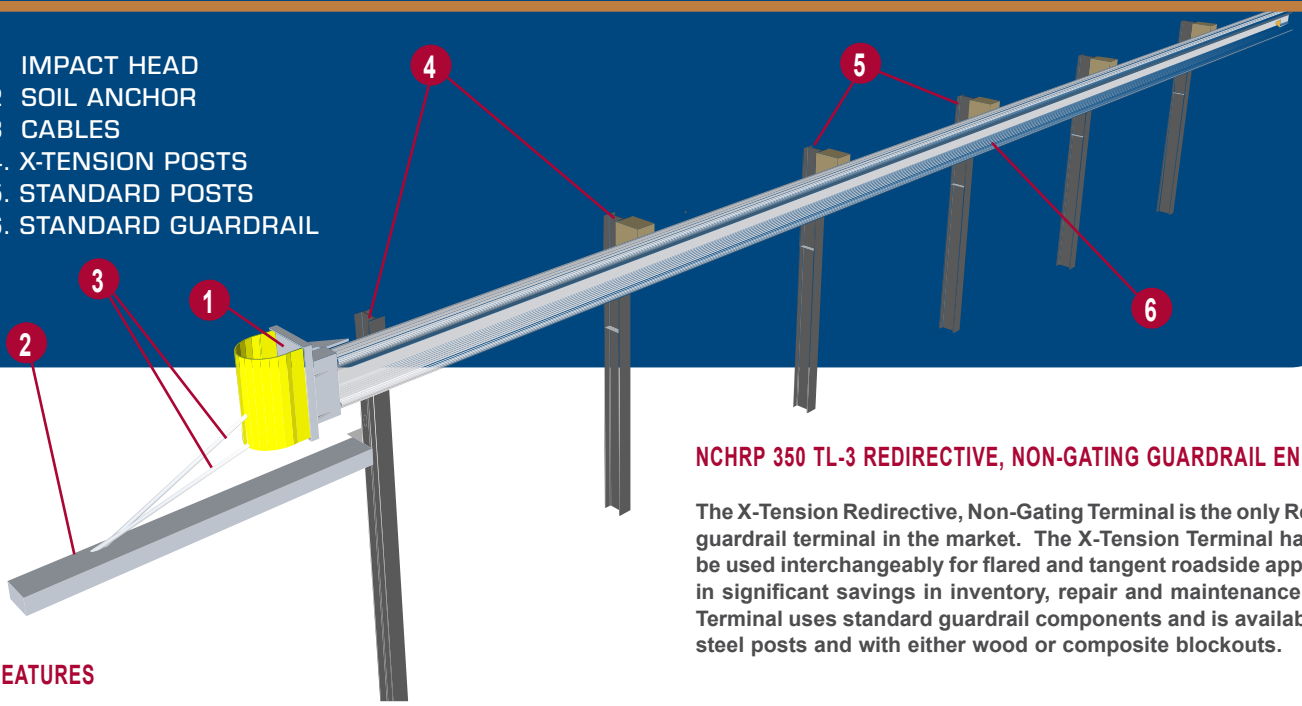

NCHRP 350 TL-3 REDIRECTIVE, NON-GATING GUARDRAIL END TERMINAL

The X-Tension Redirective, Non-Gating Terminal is the only Redirective, Non-Gating guardrail terminal in the market. The X-Tension Terminal has been engineered to be used interchangeably for flared and tangent roadside applications. This results in significant savings in inventory, repair and maintenance costs. The X-Tension Terminal uses standard guardrail components and is available with either wood or steel posts and with either wood or composite blockouts.

FEATURES

- Only NCHRP 350 tested Redirective Non-Gating Guardrail Terminal available
- Available in 727 or 787mm [28.5 or 31"] heights
- Uses same components for tangent or flared applications
- Easy to install
- Utilizes many standard guardrail components

WHERE TO USE

Side of road where limited clear zone or excessive slope restricts the use of Redirective Gating terminals.

REDIRECTIVE NON-GATING

The X-Tension Terminal can be installed either flared or tangent.

PHYSICAL SPECIFICATIONS

Length	12 m [40']
Width	572 mm [22.5"]
Height	727 / 787mm [28.5/31"]
Weight	534 kg [1179 lb]
Test Level	NCHRP 350 TL-3

FREQUENTLY ASKED QUESTIONS

WHAT MAKES THE X-TENSION TERMINAL DIFFERENT FROM THE OTHER END TERMINALS ON THE MARKET?
The X-Tension Terminal is tested to NCHRP 350 as a Redirective Non-Gating System. All other terminals are tested as Redirective Gating Systems, meaning they will only start to redirect at the third post.

IS A TRANSITION NEEDED TO ATTACH TO STANDARD GUARDRAIL?
The X-Tension Terminal is designed to attach directly to guardrail with no transition required.

CAN THE X-TENSION TERMINAL BE ATTACHED TO CONCRETE BARRIER?
The X-Tension Terminal can be attached to concrete barrier with the addition of standard transitions.

CAN THE X-TENSION TERMINAL BE INSTALLED USING COMPOSITE BLOCKOUTS?
The X-Tension Terminal can be ordered with either wood or composite blockouts.

DISTRIBUTED BY:

General details for the X-Tension Terminal are subject to change without notice to reflect improvements and upgrades. Additional information is available from Barrier Systems, Inc.

BARRIER SYSTEMS

A LINDSAY TRANSPORTATION SOLUTIONS COMPANY

PT # PTXT03-100111 © Barrier Systems, Inc.

3333 VACAVALLEY PKWY, VACAVILLE, CA 95688 TEL. +1 707.374.6800 U.S. TOLL FREE 888.800.3691 WWW.BARRIERSYSTEMSINC.COM

X-Tension Guardrail Terminal End
General Specifications

I. Description

The X-Tension guardrail terminal end is designed, manufacture and supplied by Barrier Systems Sales and Service LLC.
The X-Tension is a Tangent, Flared, Median, fully redirective, non-gating terminal end which is energy absorbing. The X-Tension substantially consists of an impact head with a brake bar inside, a slider assembly and slider bracket, a cable anchor bracket, a foundation anchor assembly, ground strut, steel breakaway posts and three standard 12 gauge highway W-beam rails.
The total length of the system is 11.4 meters and may be flared at the head end over the 11.4 meters, 0 - 1219mm / 0 – 4’ to the face of the rail.

II. Performance

A. The X-Tension is capable of redirecting vehicles of 820 to 2000Kg’s impacting the side of the system at an angle of up to 20 degrees and 100 KPH when impacting from the length of need. The length of need starts at post #1.

B. When impacted end on with the 820 to 2000Kg vehicle at speeds of up to 100 KPH, the system is brought to a controlled stop or allowed to penetrate to the back side, depending on the impact conditions.

C. In all end on impacts, varying amounts of energy are dissipated depending on the length of time the vehicle remains in contact with the impact head.

D. During end on impacts the head, rail one and the slider, telescope over rail two until rail two comes to rest in the back of the impact head. At this point, the V notch bolts joining rail one and two are sheared allowing the entire rail one, head, slider and rail two assembly to slide over rail three.

E. As the head is pushed down the two cables, the cables are pulled through the brake bar in a torturous path, which dissipates energy.

III. Materials

A. Impact Head

The impact head shall be fabricated from hot rolled steel that is galvanized after fabrication in accordance with AS/NZS 4680.
The hot rolled steel specification – ASM A36 , AS 3678-250, JISG3101 – SS400, BS4360 -43A.

The impact head shall be attached to the end of rail one with 8 standard splice bolts reversed so that the nut is on the traffic face. The head contains the brake bar through which the cables are threaded before tightening the brake bar.

B. Steel Line Posts

These posts are fabricated from W6 x 13.5 standard I beam section. Standard specification for this section is AASHTO M270M (ASTM A 709M) grade 250steel. Posts #1 and #2 are crimped. Posts 3 – 6 are standard guardrail posts as per AASHTO PWE01, Wide Flange Post.

C. Timber Block Outs

Standard routed block outs H4 treated, Number one rough sawn pine. 5 block outs are required; Post #1 does not have a block out.

D. Slider and Slider Bracket

Shall be constructed from standard, 350 grade, guardrail and hot rolled steel of the same specification as the impact head. The slider is bolted to the downstream end of rail one with 4 standard splice bolts reversed so that the nuts are on the outside. The slider bracket is bolted with 4 splice bolts to the end of rail two in the usual manner. Once rail one is slid over rail two into its final position, the locking angle is bolted to the slider bracket. The combination of these two devices allows the rails to telescope when impacted end on and yet still maintain full ribbon strength in the rail during a redirect impact. Both components are to be hot dipped galvanized after fabrication.

E. Cable Anchor Bracket

The cable bracket is fabricated from hot rolled mild steel, 5mm thick, and attached to the back of the rail at the junction between rails 3 and 4. (Post 7). The bracket is attached using four centre splice bolts that are joining the rails. Bracket is also hot dip galvanized after fabrication.

F. Cables

Two cables are constructed using 19mm 3x7 strand galvanised cable complete with an M24 threaded rod swaged onto each end. The cables are attached to the ground anchor point, threaded through the impact head and brake bar, down the back of the W beam in the “hollows” and attached to the cable anchor bracket at the downstream end. The brake bar is then turned and locked into place before the cables are tightened. Cable specification, DSR Galvanized 320 / ASTM A-603

G. Foundation Anchor

Foundation anchor consists of one C section anchor fabricated from mild steel channel and one I section anchor fabricated from the same section and specification as the Line Posts.

The C section anchor shall be constructed from mild steel conforming to the following specifications ASM A36, AS 3678-300, JISG3101 – SS400, BS4360 - 43A.

H. Ground Strut

Ground strut is fabricated from C section mild steel made to the same standard as the foundation anchor specifications. The ground strut shall join the C section anchor point and the, I section, anchor point which is also the bottom half of post one.

I. Post One and Two

Fabricated from the same section and specification as the line posts. Post #1 is a short post and bolts into the top of the, I section, anchor point. Both Post #1 and #2 are crimped near the ground level. The impact head is bolted to post one with a standard 50mm long splice bolt.

J. Bull nose

Fabricated from a, 3mm thick, polyethylene plastic sheeting. This bull nose is "bent" into position on site.

K. Rail Elements

Standard 12 gauge, 2.7mm BMT, 350 grade galvanised W beam. As per AASHTO M180 Class A rail. Three standard sections are required.

L. Fasteners

All fasteners shall be Class 4.6 (Grade2) or greater and galvanized in accordance with ASTM 153. Washers shall be hardened and galvanized.

IV. Construction

Design, selection and placement of the X-Tension terminal end shall be in accordance with the AASHTO Roadside Design Guide and the details shown in the construction drawings. Installation shall be in accordance with the installation instructions supplied by Barrier Systems.

Damaged systems shall be repaired or replaced immediately at the expense of the owner of the installed system.

V. Performance Specification

All leading Guardrail Terminal Ends must be fully re-directive and non-gating, capable of redirecting an errant vehicle from post one in side on impacts. (up to 2000P at 20 Degrees and 100 kph). The terminal end must be telescoping and energy absorbing in end on impacts with the impacting force held in tension rather than compression. No debris shall be expelled from the system.