INVITATION TO BID NO. 18-0010

ORLEANS PARISH SCHOOL BOARD
PURCHASING DEPARTMENT
3520 General DeGaulle Drive, Room 5055
New Orleans, Louisiana 70114
Telephone: (504) 304-5639 Fax (504) 309-2879

SPECIFICATIONS

FOR

WATER FILTRATION SYSTEMS

INVITATION TO BID OPENING: MONDAY, AUGUST 28, 2017 AT 2:00 P.M.
NOTE: Bid response to be provided as original and one (1) copy on CD or flash drive.

BIDDER: ____ECOWATER SYSTEMS, LLC_____

SIGNATURE: _____

NAME: ____MIKE GULLICKSON _____
(Print or Type)

ADDRESS: ____1890 WOODLANE DRIVE_____

CITY, STATE, ZIP: ____WOODBURY, MN 55125_____

PHONE: ____507-774-9735_____

FAX NUMBER: ____651-731-7497 _____

E-MAIL ADDRESS: GULLICKSONM@ECOWATER.COM_

TERMS: ____NET30 _____

DO NOT DETACH THIS PAGE

ORLEANS PARISH SCHOOL BOARD
PURCHASING DEPARTMENT
3520 General De Gaulle Drive, Fifth Floor, Room 5078
New Orleans, Louisiana 70114

ADVERTISEMENT

INVITATION TO BID NO. 18-0010

WATER FILTRATION SYSTEMS

Sealed bids relative to the above will be received in the Purchasing Department for the Orleans Parish School Board at 3520 General De Gaulle Drive, Fifth Floor, Room 5055, New Orleans, Louisiana 70114 until 2:00 P.M. on Monday, August 28, 2017.

Specifications and proposal documents may be obtained upon request from the OPSB Purchasing Department in writing, by email; or lynn_dillon@opsb.us or by calling (504)304-5639 or by visiting the web site www.opsb.us/solicitations.

The OPSB reserves the right to reject any or all proposals whenever such rejection is in its best interest in accordance with law. The provisions and requirements of this advertisement shall not be waived.

ORLEANS PARISH SCHOOL BOARD

BY: Lynn Dillon
Senior Buyer

FIRST INSERTION DATE: WEDNESDAY, JULY 26, 2017
SECOND INSERTION DATE: WEDNESDAY, AUGUST 9, 2017
THIRD INSERTION DATE: WEDNESDAY, AUGUST 23, 2017

DO NOT DETACH THIS PAGE

ORLEANS PARISH SCHOOL BOARD
PURCHASING DEPARTMENT
3520 General De Gaulle Drive, Fifth Floor, Room 5055
New Orleans, Louisiana 70114

INSTRUCTIONS TO BIDDERS

Sealed bids will be received by the Orleans Parish School Board in the Purchasing Department, 3520 General De Gaulle Drive, Fifth Floor, Room 5055, New Orleans, Louisiana 70114, until **2:00 P.M. on MONDAY, AUGUST 28, 2017, for INVITATION TO BID NO. 18-0010 WATER FILTRATION SYSTEMS** with the following specifications, at which time and place the bids will be publicly opened.

A signed original and **one (1) copy on CD or flash drive (If a soft copy cannot be provided, submit one (1) paper copy.)** MUST be submitted in a sealed envelope and clearly marked: **RESPONSE TO ITB NO. 18-0010 WATER FILTRATION SYSTEMS TO BE OPENED ON MONDAY, AUGUST 28, AT 2:00 P.M.,** and addressed to the Purchasing Department, Orleans Parish School Board, 3520 General De Gaulle Drive, Fifth Floor, Room 5055, New Orleans, Louisiana 70114. The name and address of the company submitting the bid must appear on the top left corner of the envelope containing the bid document.

Hand-carried and express mail proposals may be delivered to the above address ONLY between the hours of 8:00 a.m. and 4:30 p.m. local time, Monday through Friday, excluding holidays observed by the OPSB.

The Orleans Parish School Board will not be responsible for the opening of, post-opening of, or failure to open a bid not properly addressed or identified.

The Orleans Parish School Board will not assume the responsibility for any delay as a result of failure of the mail to deliver proposals on time.

No bid(s) will be accepted after **2:00 P.M. ON MONDAY, AUGUST 28, 2017** under any conditions whatsoever. In order for your company to be provided proof of delivery time, bids should be hand delivered, sent by registered mail, or private carrier only to the Purchasing Department, 3520 General De Gaulle Drive, Fifth Floor, New Orleans, Louisiana 70114.

BIDDING DOCUMENTS: A complete set of Bidding Documents MUST be used in preparing bids; neither the Orleans Parish School Board nor its representatives assume any responsibility for errors or misinterpretations resulting from the use of incomplete sets of Bidding Documents.

The forms furnished as part of the specifications MUST be used for filing of bid and must be signed by the bidder. No bids will be considered unless made on the forms provided and must not be detached from the bidding document of which it forms a part. Failure to follow these instructions may result in your bid being disqualified.

The statement listed on the bottom of each page (DO NOT DETACH THIS PAGE) indicates that ALL of the pages included in the bid document must be submitted.

Bids that are submitted with a "NO BID" response MUST be clearly stated on the front of the envelope. (If not responding to bid, package need not be mailed.)

BIDDERS REPRESENTATION: Each Bidder by signing and submitting a bid to the Orleans Parish School Board Represents that:

a. The Bidder has read and understands the Bidding Documents and that his bid is made in accordance therewith.

b. The Bidder is furnishing the Certificate of Insurance with the Bid, in accordance with the insurance requirements.

VENDOR CONTACT: Attachment A
Bidders MUST provide NAME and TELEPHONE NUMBER of respective contact person within the firm through whom orders and/or information will be handled.

BID INQUIRY: No contact in any form or manner is to be made with any employee of the District except through the Purchasing Department. Violation of this provision shall be considered grounds for disqualification of the violator employer's bid.

CONSIDERATION OF BID: The Board reserves the right to select any part of the bid or the whole bid as well as to reject any and all bids whenever such rejection is in its best interest in accordance with law.

All blanks within the Bidding Document shall be filled in by typewriter or manually in ink. When Brand name of item is not filled in, the item specified in the specifications must be delivered. Brand name, unit price and extended price must be quoted. When no brand is indicated in the specifications, Bidder must indicate brand to be provided. Samples must be submitted if requested by the Purchasing Department.

The Bidder's name, complete address, phone number and principals of the company must be furnished.

Prices are to include inside delivery and installation a school sites. Samples must be submitted if requested by the Purchasing Department.

Bidders are cautioned to insure the unit prices are correct as written/typed. A careless error in the bid preparation or in quoting prices will not relieve the bidders' responsibility.

Per Louisiana Revised Statues Title 38:2221, "NO CONTRACT SHALL BE LET ON A COST-PLUS BASIS".

DISCOUNTS FOR PROMPT PAYMENT: Discounts/Terms for prompt payment will not be considered in the evaluation of bids. However, any offered discount will form a part of the award and will be taken if payment is made within the discount period indicated in the proposal by the Bidder. As an alternative to offering a prompt payment discount in conjunction with the bid, Bidders awarded contracts may include prompt payment discounts on individual invoices.

LOUISIANA PREFERENCE: In accordance with Act 318 of the 1958 Session of the Legislature: "PREFERENCE IS HEREBY GIVEN TO MATERIALS, SUPPLIES AND PROVISIONS PRODUCED, MANUFACTURED OR GROWN IN LOUISIANA, QUALITY BEING EQUAL TO ARTICLES OFFERED BY COMPETITORS OUTSIDE OF THE STATE".

DELIVERY: In the event of the failure of the Bidder to meet the above requirements or to deliver articles within the time specified elsewhere in these specifications, the Board reserves the right, without prior notice or putting in default but by mere lapse of time, to obtain the articles from any other person or firm at such price as may be charged without competitive bids. The difference between the price paid and the contract price shall be deducted from the following or any subsequent payment to the contractor.

CORRECTION OF MISTAKES: Bidders MUST not erase, correct or write over any prices or figures necessary for the completion of the bid. Corrections MUST be made by drawing a line through the unwanted text(s) or number(s) and rewriting the correct text(s) or number(s). If a correction is necessary, the bidder shall initial each correction. Failure to comply with the requirements may cause your bid to be disqualified. No bids shall be altered or amended after the specified time for opening.

Negligence on the part of the bidder in preparing his/her bid confers no right of withdrawal or modification of his/her bid after bids have been opened.

AWARD: The bid will be awarded to the lowest bidder that meets the specifications as determined by the District. It is appropriate to emphasize that the lowest bidder may not be considered the best. The District reserves the right to enter into a single contract or award more than one contract for all services, whichever is
deemed to be in the District's best interest.

OBJECTION TO THE AWARD: If any Bidder who submitted a Bid has an objection to the award of the Low Bidder, the objecting Bidder shall furnish that protest, in writing, to the Purchasing Department within two (2) Business Days of the date of the Bid Opening. The protest shall describe in detail the basis for the protest, and shall request a determination under this section of the Instructions to Bidders.

If a protest is filed in a timely fashion, the Purchasing Department will, review the basis for the protest and relevant facts under such terms and conditions, as the Purchasing Department considers proper. Upon completion of the review, the Purchasing Department shall submit its findings and recommendations to the Superintendent and/or OPSB who shall then review the matter under such terms and conditions, as deemed proper. Upon receipt of authority to act from the Superintendent or OPSB, the Purchasing Department will notify those Bidders involved of its decision. The decision shall be final and binding on the objecting Bidder.

WITHDRAWAL OF BID: Any bid may be withdrawn if clear and convincing sworn, written evidence of obvious mechanical, clerical or mathematical error is furnished by the bidder to the Purchasing Department within 48 hours of bid opening.

SUPPLIER PERFORMANCE AND EVALUATION: The contractor, vendor, service provider and/or supplier performance process will involve evaluating the contractor, vendor, service provider and/or supplier's overall quality status, as well as evaluating the quality of each material or service the Orleans Parish School Board wishes to purchase from the said contractor, vendor service provider and/or supplier. Prior to the invoice submission, the contractor, vendor, service provider and/or supplier, shall meet with a purchasing representative to discuss and review deliverables and timeline events for said services. By signing the certification statement, the bidder certifies that neither it nor any of its principals (e.g., key employees) have been proposed for debarment, debarred or suspended by a Federal Agency. It is the responsibility of each bidder to sign the attached certification statement and submit it with the bid. Failure to comply with this requirement will cause your bid to be

disqualified, declared non responsive.

CONTRACTS OVER $100,000: The Contractor must comply with the applicable standards, orders or requirements issued under Section 306 of the Clean Air Act [(42 USC 1837 (h)], Section 508 of the Clean Water Act (32 USC 1368), Executive Order 11738, and Environmental Protection Agency Regulations (40 CFR, Part 15), which prohibit the use under non-exempt federal contracts, grants or loans of facilities included in the EPA list of violating facilities. Contractor shall report any violations to the Orleans Parish School Board, the Department of Agriculture and to the Environmental Protection Agency Assistant Administrator for enforcement.

LAWS AND REQUIREMENTS AFFECTING LABOR: All contractors and subcontractors shall comply and conform to all applicable federal, state, and municipal labor laws and various acts mandatory and supplementary thereto, as well as, all other applicable laws, ordinances and legal requirements regarding the employment of labor to include, if applicable, to contracts which exceed $2,500.00 and which involve the employment of mechanics or laborers, the Contract Work Hours and Safety Standards Act (40 USC 327-330) as supplemented by the Department of Labor Regulations (29 CFR, Part 5). The latter requirements do not apply to the purchase of supplies or materials or articles ordinarily available on the open market.

ORLEANS PARISH SCHOOL BOARD

Lynn Dillon
Senior Buyer

Certification Regarding Debarment, Suspension, Ineligibility and Voluntary Exclusion-Lower Tier Covered Transactions

This certification is required by the regulations implementing Executive Order 12549, Debarment and Suspension, 7 CFR Part 3017, Section 3017.510, Participants' responsibilities. The regulations were published as Part IV of the January 30, 1989, Federal Register (pages 4722-4733). Copies of the regulations may be obtained by contacting the Department of Agriculture agency with which this transaction originated.

(BEFORE COMPLETING CERTIFICATION, READ INSTRUCTIONS THAT FOLLOW)

(1) The prospective lower tier participant certifies, by submission of this proposal, that neither it nor its principals are presently debarred, suspended, proposed for debarment, declared ineligible, or voluntarily excluded from participation in this transaction by any Federal department or agency.

(2) Where the prospective lower tier participant is unable to certify any of the statements in this certification, such prospective participant shall attach an explanation to this proposal.

Organization Name ECOWATER SYSTEMS, LLC

Name and Title of Authorized Representative MIKE GULLICKSON, DIRECTOR OF BUSINESS DEVELOPMENT-INSTITUTIONAL

Signature Date 8-21-2017

DO NOT DETACH THIS PAGE

Instructions for Completing Certification Regarding Debarment, Suspension, Ineligibility and Voluntary Exclusion -Lower Tier Covered Transactions (Form AD-1048)

NOTE: A School Food Authority must require that each responsive bidder include this certification statement with each bid on each contract equaling or exceeding $100,000, or any contract for audit services regardless of amount.

1 By signing and submitting this form, the prospective lower tier participant providing the certification set out on the above in accordance with these instructions.

2 The certification in this clause is a material representation of fact upon which reliance was placed when this transaction was entered into. If it is later determined that the prospective lower tier participant knowingly rendered an erroneous certification, in addition to other remedies available to the Federal Government, the department or agency with which this transaction originated may pursue available remedies, including suspension and/or debarment.

3 The prospective lower tier participant shall provide immediate written notice to the person to which this proposal is submitted if at any time the prospective lower tier participant learns that its certification was erroneous when submitted or has become erroneous by reason of changed circumstances.

4 The terms *covered transaction, debarred, suspended, ineligible, lower tier covered transaction, participant, person, primary covered transaction, principal, proposal, and voluntarily excluded,* as used in this clause, have the meanings set out in the Definitions and Coverage sections of the U. S. Department of Agriculture regulations 7CFR 3017 implementing Executive Order 12 549. (Contact the person to whom this proposal is submitted for assistance in obtaining a copy of those regulations.)

5 The prospective lower tier participant agrees by submitting this form that, should the proposed covered transaction be entered into, it shall not knowingly enter into any lower tier covered transaction with a person who is debarred, suspended, declared ineligible, or voluntarily excluded from participation in this covered transaction, unless authorized by the department or agency with which this transaction originated.

6 The prospective lower tier participant further agrees by submitting this form that it will include this clause titled "Certification Regarding Debarment, Suspension, Ineligibility and Voluntary Exclusion -Lower Tier Covered Transaction" without modification in all lower tier covered transactions and in all solicitations for lower tier covered transactions.

7 A participant in a covered transaction may rely upon a certification that a prospective participant in a lower tier covered transaction has not been debarred, suspended, ineligible, or voluntarily excluded from the covered transaction, unless the participant knows that the certification is erroneous. A participant may decide the method and frequency by which it determines the eligibility of its principals. Each participant may, but is not required to, check the Nonprocurement List.

8 Nothing contained in the foregoing shall be construed to require establishment of a system of records in order to render in good faith the certification required by this clause. The knowledge and information of a participant is not required to exceed that which is normally possessed by a prudent person in the ordinary course of business dealings.

9 Except for transactions authorized under Paragraph 5 of these instructions, if a participant in a covered transaction knowingly enters into a lower tier covered transaction with a person who is suspended, debarred, ineligible, or voluntarily excluded from participation in this transaction, in addition to other remedies available to the Federal Government, the department or agency with which this transaction originated may pursue available remedies, including suspension and/or debarment.

DO NOT DETACH THIS PAGE

CERTIFICATION REGARDING LOBBYING

CERTIFICATION FOR CONTRACTS, GRANTS, LOANS, AND COOPERATIVE AGREEMENTS EXCEEDING $100,000 IN FEDERAL FUNDS

The undersigned certifies, to the best of his or her knowledge and belief, that:

1 No Federal appropriated funds have been paid or will be paid, by or on behalf of the undersigned, to any person for influencing or attempting to influence an officer or employee of any agency, a Member of Congress, an officer or employee of Congress, or an employee of a Member of Congress in connection with the awarding of any Federal contract, the making of any Federal grant, the making of any Federal loan, the entering into of any cooperative agreement, and the extension, continuation, renewal, amendment, or modification of any Federal contract, grant, loan, or cooperative agreement.

2 If any funds other than Federal appropriated funds have been paid or will be paid to any person for influencing or attempting to influence an officer or employee of any agency, a Member of Congress, an officer or employee of Congress, or an employee of a Member of Congress in connection with this Federal contract, grant, loan, or cooperative agreement, the undersigned shall complete and submit Standard Form -LLL, "Disclosure of Lobbying Activities," in accordance with its instructions.

3 The undersigned shall require that the language of this certification be included in the award documents for all sub awards (exceeding $100,000 in Federal funds) at all tiers (including subcontracts, sub grants, and contracts under grants, loans, and cooperative agreements) and that all sub recipients shall certify and disclose accordingly.

This certification is a material representation of fact which reliance was placed when this transaction was made or entered into. Submission of this certification is a prerequisite for making or entering into this transaction imposed by section 1352, title 31, U.S. Code. Any person who fails to file the required certification shall be subject to a civil penalty of not less than $10,000 and not more than $100,000 for each such failure.

NAME/ADDRESS OF VENDOR ECOWATER SYSTEMS, LLC

TITLE/TITLE OF SUBMITTING OFFICIAL MIKE GULLICKSON, DIRECTOR OF BUSINESS DEVELOPMENT-INSTITUTIONAL

SIGNATURE DATE 8-21-2017

DO NOT DETACH THIS PAGE

GENERAL TERMS AND CONDITIONS

1 The Orleans Parish School Board (OPSB) is soliciting bids to furnish **WATER FILTRATION SYSTEMS**

2 All items must be **new**. (Used or reconditioned items will not be accepted). The bidder must guarantee that the items requested are delivered free from defects in design and construction and that they are the manufacturer's standard design.

3. Unit Price(s) to reflect inside delivery, assembly, set-up, installation, debris removal, service and training.

4. Bidder **must** also provide graphics, literature, product code(s) and a list of all deviations from the specifications. Failure to comply may result in disqualification of bid. **(Vendor catalog(s) will not be accepted in lieu of specifications.)**

5. All bids shall be valid for a minimum of 120 days. Terms understood as net 30 days.

6. Bidders must check price quotations for mathematical and typographical errors before submittal (unit prices will govern in case of error). All corrections must be initialed. Failure to comply may result in disqualification of bid.

7. The Orleans Parish School Board is exempt from all Federal and State taxes.

8. Legal identification of the company and/or organization must be listed on the bid form where indicated, including its corporate name and complete mailing address.

9. Samples of item(s) proposed as "Equal or alternate" may be required prior to bid award.

10. Each bidder must include in its bid the policy for returned equipment. Attachment A

11. The Orleans Parish School Board reserves the right to select any part of the bid or the entire bid, as well as to reject any and all bids received whenever such selection or rejection is in its best interest in accordance with law.
12. A bid may be withdrawn after the time and date designated for receiving bids if clear and convincing sworn, written evidence of obvious mechanical, clerical or mathematical error is furnished by the bidder within 48 hours of bid opening. Negligence on the part of the bidder in preparing his/her bid confers no right of withdrawal or modification of his/her bid after bids have been opened.

13. All inquiries regarding this solicitation for bids must be in writing addressed to Lynn Dillon, lynn_dillon@opsb.us

DO NOT DETACH THIS PAGE

SPECIFICATIONS AND BID FORM

ORLEANS PARISH SCHOOL BOARD
PURCHASING DEPARTMENT 3520 General De Gaulle Drive, Fifth Floor New Orleans, Louisiana 70114

TO: ORLEANS PARISH SCHOOL BOARD

This form is to be completed, signed and left attached to the Bidding Documents and delivered to the Orleans Parish School Board by the time and date advertised.

DATE: 8-21-2017

Orleans Parish School Board
Purchasing Department
3520 General De Gaulle Drive Fifth Floor, Room 5078
New Orleans, LA 70114

Re: Invitation to Bid No. 18-0010 WATER FILTRATION SYSTEMS

Gentlemen:

In compliance with the Bidding Documents, the undersigned agrees, if this offer is accepted and awarded within one hundred twenty (120) calendar days from the date for the receipt of the offer specified in the Advertisement for Bids, to furnish any or all items awarded at the unit price offered at the price set opposite each item, delivered at the designated points on the dates specified in the Delivery Schedule and during the time period specified.

Acknowledgment of Addenda:
Addendum No. _____, dated _____
Addendum No. _____, dated _____
Addendum No. _____, dated _____

DO NOT DETACH THIS PAGE

BID SPECIFICATIONS FOR POINT OF USE WATER FILTRATION SYSTEMS

INTENT OF SOLICITATION:

It is the intention of the Orleans Parish School Board (OPSB) to purchase a point-of-use filtration system for our schools' drinking water. These filtration systems will be connected to drinking fountains as well as water used in the food service area. We seek a point-of-use system that filters water just before consumption.

The awarded company shall provide a system that follows the following listed system requirements and installation process.

BACKGROUND:

- Existing drinking fountains are from a variety of companies and have been installed over a period of multiple years.
- Existing water connections in food service areas are from a variety of companies and have been installed over a period of multiple years.
- Respondents may anticipate a minimum of 299 units installed.
- The proposed system must have been in use at an installation with similar requirements to those described in this solicitation for at least 6 months prior to this bid date.

SYSTEM REQUIREMENTS:

- The system, must remove lead to at least below 15PPB as stated by EPA requirements.
- The system must produce potable water that can be safely used during boil water advisories.
- We require the system to be a point-of-use system that attaches directly to the drinking fountain water source and then connects to the existing fountain.
- A point-of-use system is also required for all water connections in the food service area. This system must be a 3-filter system that removes sediment and solids from water prior to removing lead. This measure allows the lead filter to perform at its optimum best, while maintaining the filter's lifespan.
  - Filter 1 -Sediment or Pre-Sediment
  - Filter 2 -Sediment or Lead
  - Filter 3 -Lead or Microbiological
- Company supplying filtration systems must determine best filter configuration for removal of contaminants based on existing water quality and must be on-site during installation and set-up to assure best performance.
- Systems must have a built-in safety trigger that shuts down water flow-through when filters have reached expiration.
- System must come in a tamper proof, lockable box with stainless steel braided hose line housing.
- System must have NSF/ANSI 53 and NSF P231 certification for removal of lead and other contaminants, remove chlorine odor, and deliver great tasting water.

INSTALLATION and SERVICE:

Company awarded this Contract will assure the installation and service of the systems to be on a specific schedule as determined by the OPSB. The company shall:

- Install all systems as per OPSB schedule, using certified installers.
- Assure that all systems are properly functioning and in working order prior to turnover.
- Set up a schedule with and train maintenance staff to perform filter replacement every 9 months or at filter expiration. Filter change out specs must be:

  Filters are easy to remove and replace.

  All filters are number coded for proper placement.

  Water will NOT need to be turned off to replace filters.

  On-site staff can replace filters. Company awarded this contract will be required to be on-site and determine best possible installation process and service schedules. A representative of the awarded company must be available to present point-of-use filtration technology and answer questions as needed to district staff during the purchase process.

Description Attachment C	**Quantity**	**Per unit price (including delivery and installation)**	**Installation Start Date After Receipt Of Order (period required in weeks)**
Water Filtration System As Specified: Safe Fountain System SFS-3000	**1-299**	**$694.00** Includes 1st set of filters	30 Days ARO-(Install 7WKS)
Water Filtration System As Specified: Safe Fountain System SFS-3000	**300-599**	**$664.00** Includes 1st set of filters	30 Days ARO-(Install 14WKS)
Water Filtration System As Specified: Safe Fountain System SFS-3000	**600-899**	**$624.00** Includes 1st set of filters	30 Days ARO-(Install 21WKS)
Water Filtration System As Specified: Safe Fountain System SFS-3000	**900+**	**$584.00** Includes 1st set of filters	30 DAYS ARO- (Install based on quantity)
Filter Replace (Set of 3) As Specified: Safe Fountain System SFS3000RPL	**1-1000+** Based on filter expiration or every 9 months.	**$113.00**	Replacement of filters by District Staff-Trained by Ecowater
SAFE KITCHEN SYSTEM			
>SAFE KITCHEN SYSTEM Item #SKS-34 Attachment D	**1-100+**	**$5,999.00** Includes 1st set of filters	3 Weeks ARO-(Install 1 week)
>Filter Replace (Set of 3)	**1-100+** At Wi-Fi notification (or) every 4 Months	**$399.00**	Replacement of filters by District Staff
>UV Light Replace (1 per)	**1-100+** Annual Replacement only	**$299.00**	Replacement by Staff

>As per Lynn Dillon, please see attached specifications for Safe Kitchen System, SKS-34 on last page.

INDICATE THE WARRANTY PERIOD (CHECK ONE) 30 DAYS_____ 60 DAYS_____

90 DAYS_____ 1 YEAR__X__ OTHER_____ (If OTHER, specify duration of warranty.)

All prices quoted are F.O.B. anywhere within the city limits of the City of New Orleans, Louisiana and do not include city or state sales taxes or federal excise taxes.

I have completed the Certificate of Insurance and secured signatures by a duly authorized representative of the company Attachment E

Initial

I have signed the Certificate of Debarment.

Initial

I have checked my quotations for mathematical and typographical errors. Unit Price(s) will prevail if discrepancy is noted. Unit prices will govern in case of error(s) in extension.

Initial

I have listed the Principals of the Company.

Initial

I have completed the Non-Collusion Statement.

Initial

I (or We) acknowledge and accept the General Terms and Conditions as set forth in this document.

ECOWATER SYSTEMS, LLC		8-21-2017
NAME OF COMPANY	SIGNATURE OF BIDDER	DATE

PRINCIPALS OF THE COMPANY

PRESIDENT: MOHAMMED BAYTI

VICE-PRESIDENT: CHRIS WILKER

SECRETARY: SANDY ARVIN

TREASURER: JOHN LAWSON

BIDDER: SIGNATURE: _____

NAME: MIKE GULLICKSON
(PRINT OR TYPE)

ADDRESS: 1890 WOODLANE DRIVE

CITY, STATE, and ZIP: WOODBURY, MN 55125

AREA CODE & PHONE: AREA CODE & FAX: __

E-MAIL: gullicksonm@ecowater.com

LIST THE BIDDER'S FEDERAL TAX IDENTIFICATION NUMBER [redacted]

Bidder is (check one) _____Sole Proprietorship; _____Partnership; ___X___
Corporation (If corporation, in what state incorporated)
Minnesota; or ___ Joint venture. Identify
parties:

DO NOT DETACH THIS PAGE

ORLEANS PARISH SCHOOL BOARD

Purchasing Department

VENDOR REGISTRATION FORM

DATE (MM/DD/YYYY): 08/21-2017

COMPANY NAME: Ecowater Systems, LLC

CONTACT: Mike Gullickson, Director of Business Development-Institutional

ADDRESS: 1890 Woodlane Drive

CITY, STATE, ZIP: Woodbury, MN 55125

REMIT TO ADDRESS: 1890 Woodlane Drive

CITY, STATE, ZIP: Woodbury, MN 55125

PHONE: 507-774-9735 FAX: 651-731-7497

E-MAIL ADDRESS: gullicksonm@ecowater.com

TAX ID NO: [redacted]

DUNS NO. [redacted]

☒ MANUFACTURER ☒ DISTRIBUTOR ☒ SALES OFFICE ☒ SERVICES ☐ STATE CONTRACT NO. _____

PLEASE IDENTIFY COMMODITIES AND/OR SERVICES THAT YOUR COMPANY PROVIDES:

Drinking water filtration, water softeners, In-home and commercial POE and POU applications. Ecowater has an extensive Dealer and Wholesale distribution channel as well as a Direct supply channel.

DO NOT DETACH THIS PAGE

In addition to the Vendor Registration form the OPSB requires that each respondent submit a recent W-9 form. Attachment B

The most recent W-9 form, as provided by the Internal Revenue Service, can be accessed at http://www.irs.gov/pub/irs-pdf/fw9.pdf.

NON-COLLUSION STATEMENT

State of Louisiana
Parish of Orleans

Mike Gullickson,

States that he/she is Director of Sales and Business Development- Institutional (a partner of the firm, officer of the corporation, or individual making the foregoing proposal or bid); that said bid is genuine and not collusive or sham; that said bidder has not colluded, conspired, connived or agreed, directly or indirectly, with any bidder or person to put in a sham bid or to refrain from bidding, collusion, or communication or conference, with any person, to fix the bid price or affiant or any other bidder, or to fix any overhead, profit or cost element, or that of any other bidder, or to secure any advantage against any person interested in the proposed contract, and that all statements contained in the said bid or proposal are true.

(Signature)

DO NOT DETACH THIS PAGE

ATTACHMENT A

ECOWATER CONTACTS

As per the **INSTRUCTIONS TO BIDDERS** pages 3-6, please note the following contacts for orders, returns, installation and service. Please also note the Return Policy requirements asked for on Page 10, Item10.

Project Manager/ Sales Inquiries/ Primary Contact:

Mike Gullickson, Director of Sales and Business Development- Institutional
1890 Woodlane Drive
Woodbury, MN 55125
507-774-9735
gullicksonm@ecowater.com

Customer Service/ Order Entry/ Shipping and Returns:

Ron Butler, Service and Order Entry
1890 Woodlane Drive
Woodbury, MN 55125
651-738-5864
butlerr@ecowater.com

Accounting, Invoice and Billing questions:

Adam Hardie, Accountant
1890 Woodlane Drive
Woodbury, MN 55125
hardiea@ecowater.com

Ecowater Return Policy:

- An RGA number is required to return items to Ecowater, and can be easily obtained by calling Ron Butler at 651-738-5864
- There is no requirement that needs to be met to return product to Ecowater. If you are unsatisfied with your purchase at any time, your welcome to return that merchandise.
- Ecowater is not responsible for any labor to remove product already installed. Customer does pay shipping back to Ecowater location in Woodbury, MN.

ATTACHMENT B

Form **W-9**
(Rev. December 2014)
Department of the Treasury
Internal Revenue Service

Request for Taxpayer Identification Number and Certification

Give Form to the requester. Do not send to the IRS.

Print or type
See Specific Instructions on page 2.

1 Name (as shown on your income tax return). Name is required on this line; do not leave this line blank.
MARMON WATER INC

2 Business name/disregarded entity name, if different from above
ECOWATER SYSTEMS LLC

3 Check appropriate box for federal tax classification; check only one of the following seven boxes:
☐ Individual/sole proprietor or single-member LLC ☑ C Corporation ☐ S Corporation ☐ Partnership ☐ Trust/estate
☐ Limited liability company. Enter the tax classification (C=C corporation, S=S corporation, P=partnership) ▶
Note. For a single-member LLC that is disregarded, do not check LLC; check the appropriate box in the line above for the tax classification of the single-member owner.
☐ Other (see instructions) ▶

4 Exemptions (codes apply only to certain entities, not individuals; see instructions on page 3):
Exempt payee code (if any) 5
Exemption from FATCA reporting code (if any)
(Applies to accounts maintained outside the U.S.)

5 Address (number, street, and apt. or suite no.)
1890 WOODLANE DRIVE

Requester's name and address (optional)

6 City, state, and ZIP code
WOODBURY MN 55125

7 List account number(s) here (optional)

Part I Taxpayer Identification Number (TIN)

Enter your TIN in the appropriate box. The TIN provided must match the name given on line 1 to avoid backup withholding. For individuals, this is generally your social security number (SSN). However, for a resident alien, sole proprietor, or disregarded entity, see the Part I instructions on page 3. For other entities, it is your employer identification number (EIN). If you do not have a number, see *How to get a TIN* on page 3.

Note. If the account is in more than one name, see the instructions for line 1 and the chart on page 4 for guidelines on whose number to enter.

Social security number
[ ][ ][ ] – [ ][ ] – [ ][ ][ ][ ]

or

Employer identification number
[redacted]

Part II Certification

Under penalties of perjury, I certify that:

1. The number shown on this form is my correct taxpayer identification number (or I am waiting for a number to be issued to me); and
2. I am not subject to backup withholding because: (a) I am exempt from backup withholding, or (b) I have not been notified by the Internal Revenue Service (IRS) that I am subject to backup withholding as a result of a failure to report all interest or dividends, or (c) the IRS has notified me that I am no longer subject to backup withholding; and
3. I am a U.S. citizen or other U.S. person (defined below); and
4. The FATCA code(s) entered on this form (if any) indicating that I am exempt from FATCA reporting is correct.

Certification instructions. You must cross out item 2 above if you have been notified by the IRS that you are currently subject to backup withholding because you have failed to report all interest and dividends on your tax return. For real estate transactions, item 2 does not apply. For mortgage interest paid, acquisition or abandonment of secured property, cancellation of debt, contributions to an individual retirement arrangement (IRA), and generally, payments other than interest and dividends, you are not required to sign the certification, but you must provide your correct TIN. See the instructions on page 3.

Sign Here Signature of U.S. person ▶ [signature] Date ▶ 2/2/15

General Instructions

Section references are to the Internal Revenue Code unless otherwise noted.

Future developments. Information about developments affecting Form W-9 (such as legislation enacted after we release it) is at *www.irs.gov/fw9*.

Purpose of Form

An individual or entity (Form W-9 requester) who is required to file an information return with the IRS must obtain your correct taxpayer identification number (TIN) which may be your social security number (SSN), individual taxpayer identification number (ITIN), adoption taxpayer identification number (ATIN), or employer identification number (EIN), to report on an information return the amount paid to you, or other amount reportable on an information return. Examples of information returns include, but are not limited to, the following:

- Form 1099-INT (interest earned or paid)
- Form 1099-DIV (dividends, including those from stocks or mutual funds)
- Form 1099-MISC (various types of income, prizes, awards, or gross proceeds)
- Form 1099-B (stock or mutual fund sales and certain other transactions by brokers)
- Form 1099-S (proceeds from real estate transactions)
- Form 1099-K (merchant card and third party network transactions)
- Form 1098 (home mortgage interest), 1098-E (student loan interest), 1098-T (tuition)
- Form 1099-C (canceled debt)
- Form 1099-A (acquisition or abandonment of secured property)

Use Form W-9 only if you are a U.S. person (including a resident alien), to provide your correct TIN.

If you do not return Form W-9 to the requester with a TIN, you might be subject to backup withholding. See *What is backup withholding?* on page 2.

By signing the filled-out form, you:

1. Certify that the TIN you are giving is correct (or you are waiting for a number to be issued),
2. Certify that you are not subject to backup withholding, or
3. Claim exemption from backup withholding if you are a U.S. exempt payee. If applicable, you are also certifying that as a U.S. person, your allocable share of any partnership income from a U.S. trade or business is not subject to the withholding tax on foreign partners' share of effectively connected income, and
4. Certify that FATCA code(s) entered on this form (if any) indicating that you are exempt from the FATCA reporting, is correct. See *What is FATCA reporting?* on page 2 for further information.

ATTACHMENT C

ECOWATER SYSTEMS®

Your Water. Perfected.

EcoWater Safe Fountain System

Reduces Lead and Other Contaminants

*SPECIFICATIONS

Application

Easily Hooks Up to Existing Fountains

Important Note From Our President:

Most lead contamination comes from underground pipes and lead solder joints in the walls. If you find high levels of lead in one fountain or faucet, it's sure to show up in others since they're all connected to the same piping systems. School districts that initially replaced a 'hot' fountain or two have found they're just chasing the problem from one location to another. Point-of-use filtration is the only effective way of treating lead and other potentially harmful contaminants by producing fresh filtered water just before it's consumed. We're experts in the area and our patented Metsorb® lead absorber is the standard for the industry. Let us help solve your district's water problems with cost effective, easy to maintain solutions.

Sincerely,

Chris Wilker,
President, Professional Products
EcoWater Systems LLC
A Berkshire Hathaway Company

A New Standard for Drinking Water Fountain Purity

✔ **Effective Contaminant Reduction:**

- NSF 53 – Certified for 99.3% lead (both colloidal and dissolved lead) removal.
- A complete range of point-of-use systems to resolve virtually any water problem from lead, sediment, taste, odor, bacteria, virus, cysts and chemical to pharmaceutical contamination.
- Ensures safe water regardless of municipal system upsets, water main breaks or plumbing problems.
- Provides great tasting water that encourages good student hydration.

✔ **Low Cost:**

- Significantly lower cost than bottled water and easier to maintain.
- Attaches to your existing fountains, saving cost and eliminating the problems associated with opening walls in older schools.

✔ **Security:**

- Automatic shut-off that monitors flow and turns off after the rated number of gallons is reached to ensure proper maintenance and healthy water for students.
- Industrial tamper proof cabinet protects the system from accidental damage.

✔ **Rental and Professional Installation / Service Options:**

- Professional installation and maintenance available through EcoWater's extensive dealer network.
- Rental and maintenance options to suit any user's budget.

✔ **Technology:**

- The SFS1000: a single stage filtration system that reduces lead, cysts, chemicals, pharmaceuticals and odors, while making your water taste great.
- The SFS3000: a triple stage filtration system designed for areas with high sediment, in addition to removing the contaminants listed above.
- The SFS3500: the ultimate triple stage filtration system that also reduces bacteria and other microbiological contaminants.
- This product is covered by a number of issued patents.

ATTACHMENT C

Specifications

	SFS1000	SFS3000	SFS3500
Part #	SFS1000	SFS3000	SFS3500
Supply water pressure (min.-max.)	30-100 psi (207-689 kPa)	40 -100 psi (276-689 kPa)	50-100 psi (345-689 kPa)
Supply water temperature (min.-max.)	40-100°F (4 - 38°C)	40-100°F (4 - 38°C)	40-100°F (4 - 38°C)
Flow rate (max.) gpm	1.85 (7.0 LPM)	1.85 (7.0 LPM)	1.85 (7.0 LPM)
Maximum iron/manganese	0	0	0
Maximum hydrogen sulfide	0	0	0
Pre-filter (sediment/chlorine)	–	Melt Blown	–
Advanced sediment cartridge	–	FACT®	FACT®
Advanced lead cartridge	Carbon Block	Carbon Block	Carbon Block
Purifying cartridge	–	–	Purifying

Contaminant Reduction

Contaminant	Required Influent Level (µg/L)[2]	NSF Max. Permissible Eff. Level (µg/L)[2]	Average Influent Level (µg/L)[2]	Avg. / Max. Effluent Level (µg/L)[2]	Avg. / Min. Percent Removal	EPA[1] MCL (µg/L)[2]
Lead @ pH 6.5	150 ± 10%	10	150	<0.5 / <0.5	>99.7 / >99.7	15
Lead @ pH 8.5	150 ± 10%	10	140	<0.5 / <0.5	>99.7 / >99.6	15
Mercury @ pH 6.5	6 ± 10%	2	5.7	<0.2 / <0.2	>96.5 / >96.5	2
Mercury @ pH 8.5	6 ± 10%	2	5.9	0.3 / 0.6	95.0 / 89.8	2
Benzene	15 ± 10%	5	15	<0.5 / <0.5	>96.7 / >96.7	5
Cyst	≥50,000 #/mL[5]	99.95%[3]	92,500 #/mL[5]	<1#/mL/1#/mL[5]	99.99 / 99.99	None[4]
Substance						
Chlorine Taste and Odor	2000 ± 10%	50%[3]	1,900	50 / 50	97.4 / 97.4	None[4]
Particulate, Class I (0.5 to < 1 micron)[5]	10,000[5]	85%[3]	19,700,000[5]	318,300 /580,000[5]	98.49 / 99.6	None[4]

[1] EPA MCL means Environmental Protection Agency Maximum Contaminant Level as required under the Safe Drinking Water Act.
[2] µg/L means Micrograms per Liter, which is equivalent to parts to billion (PPB).
[3] NSF minimum percent reduction requirement. Acceptance level for this substance is based on percent reduction rather than maximum effluent concentration.
[4] The EPA has not determined an MCL for this chemical.
[5] Particulate Class I and cyst reported in particles per milliliter or mL.
This system has been tested according to NSF/ANSI 42/53 for reduction of the substances listed. The concentration of the indicated substances in water entering the system was reduced to a concentration less than or equal to the permissible limit for water leaving the system, as specified in NSF/ANSI 42/53.

Contact your EcoWater Pro for the list of organic chemicals reduced by this system.

Dimensions

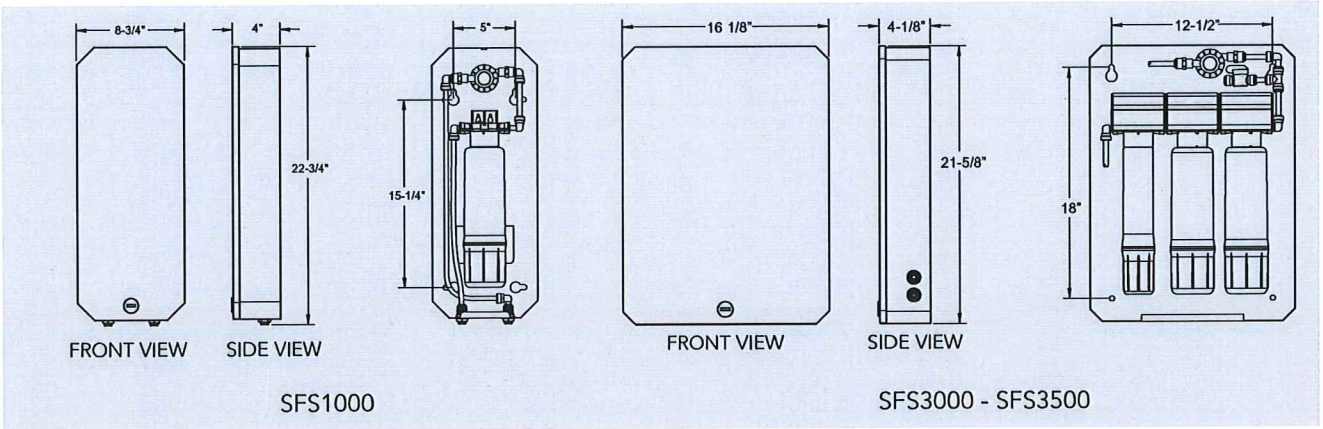

For speedy quotes or answers to questions, contact us at:
eci@ecowater.com

Specfications subject to change without notice. Orders are subject to acceptance by EcoWater Systems LLC.

www.ecowater.com | 1890 Woodlane Drive, Woodbury MN 55125 | 800.228.9326 | ©2017. All Rights Reserved.

0602922 Rev. C 06/17

ATTACHMENT D

ECOWATER SYSTEMS®

Safe Kitchen System

Lead Reduction and a Whole Lot More

SPECIFICATIONS

Application

Food Service

Wi-Fi Monitoring

Features & Benefits

- ✔ 99.3% lead reduction that meets NSF/ANSI Standard 53*
- ✔ 99.99% reduction of bacteria by on-board Ultra Violet (UV) treatment that meets NSF/ANSI Standard 55*
- ✔ 99.95% cyst reduction based on our patented FACT® prefiltration technology that meets NSF/ANSI Standard 53*
- ✔ Outstanding chlorine taste and odor reduction that helps ensure great tasting food
- ✔ Wi-Fi capabilities that enable remote real-time system performance monitoring to ensure proper water quality and trouble-free operation
- ✔ Compact design with either wall mount, floor or shelf mounting
- ✔ 5 or 10 gpm flow rates and 17,000 or 34,000 gallon capacities for smaller 1-4 sink or larger 5+ sink kitchens
- ✔ Installation and service from our extensive network of EcoWater professionals or DIY options available
- ✔ Purchase and rental/service options available

NSF COMPONENT

The MATRIKX + CTO® filter cartridge Pb1 is Tested and Certified by NSF International under NSF/ANSI Standard 42 for material requirements only.

FACT FLOW & CAPTURE TECHNOLOGY

Patented technology delivers cleaner, better tasting water without flow reduction.

*Manufacturer's testing based on NSF/ANSI Standards 53, 55 and 42.

ATTACHMENT D

Specifications

Model	SKS-17	SKS-34
Part Number	7364756	7364764
Lead Reduction Capacity	17,000 gallons @ 5 gpm*	34,000 gallons @ 10 gpm*
Filter Cartridges	1 FACT®, 1 Pb1	1 FACT®, 2 Pb1
Operating Pressure (psi)	40-90	40-90
Flow Rate	5 gpm	10 gpm
Nominal Micron Rating*	0.5 micron	0.5 micron
Temperature Range (°F/°C)	40-100 / 4-38	40-100 / 4-38
Plumbing Connection	1" NPT Inlet & Outlet	1" NPT Inlet & Outlet
Electrical	120 VAC, 50/60 Hz	120 VAC, 50/60 Hz

*Manufacturer's testing based on NSF/ANSI Standards 53, 55 and 42.

MATRIKX® Pb1® extruded activated carbon filters reduce soluble lead using an ion-exchange filter medium that is combined with particulate filtration to intercept insoluble lead-containing particles.

Dimensions

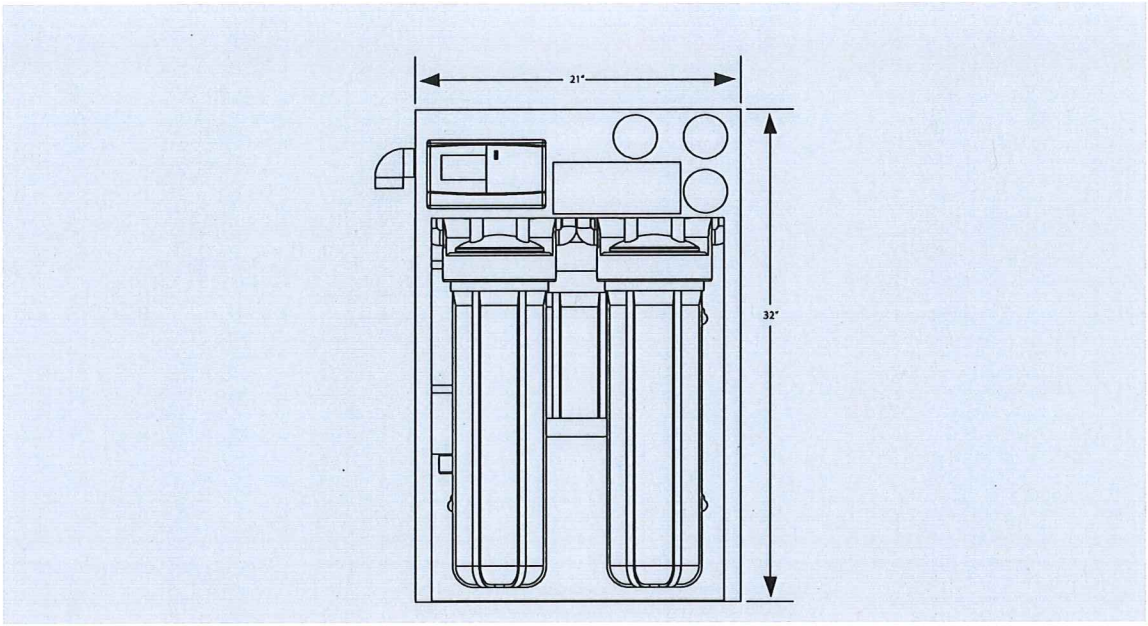

Designed, Engineered & Assembled in the U.S.A.

MEMBER Water Quality Association

INDEPENDENTLY CERTIFIED NSF

ISO 9001 REGISTERED

For speedy quotes or answers to questions, contact us at:
info@safefountain.com

ECOWATER SYSTEMS®

Specfications subject to change without notice. Orders are subject to acceptance by EcoWater Systems LLC.

ATTACHMENT E

CERTIFICATE OF LIABILITY INSURANCE

DATE(MM/DD/YYYY) 08/10/2017

THIS CERTIFICATE IS ISSUED AS A MATTER OF INFORMATION ONLY AND CONFERS NO RIGHTS UPON THE CERTIFICATE HOLDER. THIS CERTIFICATE DOES NOT AFFIRMATIVELY OR NEGATIVELY AMEND, EXTEND OR ALTER THE COVERAGE AFFORDED BY THE POLICIES BELOW. THIS CERTIFICATE OF INSURANCE DOES NOT CONSTITUTE A CONTRACT BETWEEN THE ISSUING INSURER(S), AUTHORIZED REPRESENTATIVE OR PRODUCER, AND THE CERTIFICATE HOLDER.

IMPORTANT: If the certificate holder is an ADDITIONAL INSURED, the policy(ies) must have ADDITIONAL INSURED provisions or be endorsed. If SUBROGATION IS WAIVED, subject to the terms and conditions of the policy, certain policies may require an endorsement. A statement on this certificate does not confer rights to the certificate holder in lieu of such endorsement(s).

PRODUCER
Aon Risk Services Central, Inc.
Chicago IL Office
200 East Randolph
Chicago IL 60601 USA

CONTACT NAME:
PHONE (A/C. No. Ext): (866) 283-7122 **FAX (A/C. No.):** (800) 363-0105
E-MAIL ADDRESS:

INSURER(S) AFFORDING COVERAGE		NAIC #
INSURER A:	ACE American Insurance Company	22667
INSURER B:		
INSURER C:		
INSURER D:		
INSURER E:		
INSURER F:		

INSURED
Ecowater Systems, LLC
1890 Woodlane Drive
Woodbury MN 55125 USA

COVERAGES **CERTIFICATE NUMBER:** 570067917074 **REVISION NUMBER:**

THIS IS TO CERTIFY THAT THE POLICIES OF INSURANCE LISTED BELOW HAVE BEEN ISSUED TO THE INSURED NAMED ABOVE FOR THE POLICY PERIOD INDICATED. NOTWITHSTANDING ANY REQUIREMENT, TERM OR CONDITION OF ANY CONTRACT OR OTHER DOCUMENT WITH RESPECT TO WHICH THIS CERTIFICATE MAY BE ISSUED OR MAY PERTAIN, THE INSURANCE AFFORDED BY THE POLICIES DESCRIBED HEREIN IS SUBJECT TO ALL THE TERMS, EXCLUSIONS AND CONDITIONS OF SUCH POLICIES. LIMITS SHOWN MAY HAVE BEEN REDUCED BY PAID CLAIMS. **Limits shown are as requested**

INSR LTR	TYPE OF INSURANCE	ADDL INSD	SUBR WVD	POLICY NUMBER	POLICY EFF (MM/DD/YYYY)	POLICY EXP (MM/DD/YYYY)	LIMITS	
A	X COMMERCIAL GENERAL LIABILITY			HDOG27859033	11/15/2016	11/15/2017	EACH OCCURRENCE	$2,000,000
	CLAIMS-MADE X OCCUR						DAMAGE TO RENTED PREMISES (Ea occurrence)	$100,000
							MED EXP (Any one person)	$10,000
							PERSONAL & ADV INJURY	$1,000,000
	GEN'L AGGREGATE LIMIT APPLIES PER:						GENERAL AGGREGATE	$2,000,000
	X POLICY PRO-JECT LOC						PRODUCTS - COMP/OP AGG	$2,000,000
	OTHER:							
	AUTOMOBILE LIABILITY						COMBINED SINGLE LIMIT (Ea accident)	
	ANY AUTO						BODILY INJURY (Per person)	
	OWNED AUTOS ONLY / SCHEDULED AUTOS						BODILY INJURY (Per accident)	
	HIRED AUTOS ONLY / NON-OWNED AUTOS ONLY						PROPERTY DAMAGE (Per accident)	
	UMBRELLA LIAB OCCUR						EACH OCCURRENCE	
	EXCESS LIAB CLAIMS-MADE						AGGREGATE	
	DED RETENTION							
	WORKERS COMPENSATION AND EMPLOYERS' LIABILITY Y/N						PER STATUTE OTH-ER	
	ANY PROPRIETOR / PARTNER / EXECUTIVE OFFICER/MEMBER EXCLUDED? N/A						E.L. EACH ACCIDENT	
	(Mandatory in NH) If yes, describe under DESCRIPTION OF OPERATIONS below						E.L. DISEASE-EA EMPLOYEE	
							E.L. DISEASE-POLICY LIMIT	

DESCRIPTION OF OPERATIONS / LOCATIONS / VEHICLES (ACORD 101, Additional Remarks Schedule, may be attached if more space is required)

CERTIFICATE HOLDER

ORLEANS PARISH SCHOOL BOARD
3520 GENERAL DE GAULLE DRIVE
FIFTH FLOOR, ROOM 5055
NEW ORLEANS LA 70114 USA

CANCELLATION

SHOULD ANY OF THE ABOVE DESCRIBED POLICIES BE CANCELLED BEFORE THE EXPIRATION DATE THEREOF, NOTICE WILL BE DELIVERED IN ACCORDANCE WITH THE POLICY PROVISIONS.

AUTHORIZED REPRESENTATIVE

Aon Risk Services Central, Inc.

Holder Identifier :

Certificate No : 570067917074

©1988-2015 ACORD CORPORATION. All rights reserved.

The ACORD name and logo are registered marks of ACORD