Congressional Research Service
Informing the legislative debate since 1914

Navy Lasers, Railgun, and Hypervelocity Projectile: Background and Issues for Congress

Ronald O'Rourke
Specialist in Naval Affairs

November 30, 2017

Congressional Research Service
7-5700
www.crs.gov
R44175

CRS REPORT
Prepared for Members and
Committees of Congress

Summary

The Navy is currently developing three potential new weapons that could improve the ability of its surface ships to defend themselves against enemy missiles—solid state lasers (SSLs), the electromagnetic railgun (EMRG), and the hypervelocity projectile (HVP).

Any one of these new weapon technologies, if successfully developed and deployed, might be regarded as a "game changer" for defending Navy surface ships against enemy missiles. If two or three of them are successfully developed and deployed, the result might be considered not just a game changer, but a revolution. Rarely has the Navy had so many potential new types of surface-ship missile-defense weapons simultaneously available for development and potential deployment. The HPV in particular has emerged as a program of particular interest to the Department of Defense (DOD), which is exploring the potential for using the weapon across multiple U.S. military services.

Although the Navy in recent years has made considerable progress in developing SSLs, EMRG, and HVP, a number of significant development challenges remain. Overcoming these challenges will likely require years of additional development work, and ultimate success in overcoming them is not guaranteed.

The issue for Congress is whether to approve, reject, or modify the Navy's funding requests and proposed acquisition strategies for these three potential new weapons. Potential oversight questions for Congress include the following:

- Using currently available approaches for countering anti-ship cruise missiles (ASCMs) and anti-ship ballistic missiles (ASBMs), how well could Navy surface ships defend themselves in a combat scenario against an adversary such as China that has large numbers of ASCMs (including advanced models) and ASBMs? How would this change if Navy surface ships in coming years were equipped with SSLs, EMRG, HVP, or some combination of these systems?
- How significant are the remaining development challenges for SSLs, EMRG, and HVP?
- Are current schedules for developing SSLs, EMRG, and HVP appropriate in relation to remaining development challenges and projected improvements in enemy ASCMs and ASBMs? To what degree are current schedules for developing SSLs, EMRG, or HVP sensitive to annual funding levels?
- When does the Navy anticipate issuing roadmaps detailing its plans for procuring and installing production versions of SSLs, EMRGs, and HVP on specific Navy ships by specific dates?
- Will the kinds of surface ships that the Navy plans to procure in coming years have sufficient space, weight, electrical power, and cooling capability to take full advantage of SSLs (particularly those with beam powers above 200 kW) and EMRG? What changes, if any, would need to be made in Navy plans for procuring large surface combatants (i.e., destroyers and cruisers) or other Navy ships to take full advantage of SSLs and EMRG?
- Are the funding sources for SSLs, EMRG, and HVP in Navy and Defense-Wide research and development accounts sufficiently visible for supporting congressional oversight?

Contents

Introduction 1
Issue for Congress 1
Scope of Report 1
Background 2
Strategic and Budgetary Considerations 2
Concern About Survivability of Navy Surface Ships 2
Depth of Magazine and Cost Exchange Ratio 3
SSLs, EMRG, and HVP in Brief 4
SSLs 4
EMRG 15
HVP 18
Indirectly Improving Ability to Counter ASCMs and ASBMs 26
Remaining Development Challenges 26
SSLs 27
EMRG and HVP 28
Transitioning from Development to Procurement 30
Issues for Congress 31
Potential Oversight Questions 31
Legislative Activity for FY2018 31
Summary of Congressional Action on FY2018 Funding 31
FY2018 National Defense Authorization Act (H.R. 2810/S. 1519) 32
House 32
Senate 32
Conference 36
FY2018 DOD Appropriations Act (Division A of H.R. 3219) 38
House 38
House Floor Action 39

Figures

Figure 1. Laser Weapon System (LaWS) on USS *Ponce* 6
Figure 2. Laser Weapon System (LaWS) on USS *Ponce* 7
Figure 3. Laser Weapon System (LaWS) on USS *Ponce* 8
Figure 4. Laser Weapon System Demonstrator (LWSD) on Self Defense Test Ship 9
Figure 5. Laser Weapon System Demonstrator (LWSD) on Self Defense Test Ship 10
Figure 6. ONR Graphic of LWSD Components 11
Figure 7. Industry-Built EMRG Prototype Demonstrator 16
Figure 8. Industry-Built EMRG Prototype Demonstrator 16
Figure 9. Photograph Showing HVP 19
Figure 10. HVP 20
Figure 11. HVP Launch Packages 21
Figure 12. HVP Application to Various Launchers 22
Figure 13. Navy Slide Depicting Operations Against Various Target Types 23

Figure 14. Development Challenges for SSLs 27
Figure 15. Development Challenges for EMRG 29

Tables

Table 1. Summary of Congressional Action on FY2018 Funding..... 32

Appendixes

Appendix. Potential Advantages and Limitations of Shipboard Lasers 40

Contacts

Author Contact Information 42

Introduction

Issue for Congress

This report provides background information and issues for Congress on three potential new weapons that could improve the ability of Navy surface ships to defend themselves against enemy missiles—solid state lasers (SSLs), the electromagnetic railgun (EMRG), and the hypervelocity projectile (HVP).[1]

Any one of these new weapon technologies, if successfully developed and deployed, might be regarded as a "game changer" for defending Navy surface ships against enemy missiles. If two or three of them are successfully developed and deployed, the result might be considered not just a game changer, but a revolution. Rarely has the Navy had so many potential new types of surface-ship missile-defense weapons simultaneously available for development and potential deployment. Although the Navy in recent years has made considerable progress in developing SSLs, EMRG, and HVP, a number of significant development challenges remain. The HPV in particular has emerged as a program of particular interest to the Department of Defense (DOD), which is exploring the potential for using the weapon across multiple U.S. military services.

The issue for Congress is whether to approve, reject, or modify the Navy's funding requests and proposed acquisition strategies for these three potential new weapons. Congress's decisions on this issue could affect future Navy capabilities and funding requirements and the defense industrial base.

For an overview of the strategic and budgetary context in which the programs covered in this report and other Navy programs may be considered, see CRS Report RL32665, *Navy Force Structure and Shipbuilding Plans: Background and Issues for Congress*, by Ronald O'Rourke.[2]

Scope of Report

SSLs are being developed by multiple parts of DOD, not just the Navy. SSLs, EMRG, and HVP, moreover, have potential application to military aircraft and ground forces equipment, not just surface ships. And SSLs, EMRG, and HVP can be used for missions other than defending against ASCMs and ASBMs.[3] This report focuses on Navy efforts to develop SSLs, EMRG, and HVP for potential use in defending Navy surface ships against ASCMs and ASBMs. It supersedes an earlier CRS report that provided an introduction to potential Navy shipboard lasers.[4]

Note that while fictional depictions of laser weapons in popular media often show them being used to attack targets at long ranges, the SSLs currently being developed by the Navy for

[1] Railgun is also spelled as rail gun; EMRG is also abbreviated as EM railgun; hypervelocity is also spelled as hyper-velocity or hyper velocity.

[2] See also CRS Report R43838, *A Shift in the International Security Environment: Potential Implications for Defense—Issues for Congress*, by Ronald O'Rourke, and CRS Report R44891, *U.S. Role in the World: Background and Issues for Congress*, by Ronald O'Rourke and Michael Moodie.

[3] As discussed later in the report, the Navy is exploring the potential for using shipboard lasers to counter small boats and unmanned aerial vehicles (UAVs), and EMRG can be used to attack land targets.

[4] CRS Report R41526, *Navy Shipboard Lasers for Surface, Air, and Missile Defense: Background and Issues for Congress*, by Ronald O'Rourke. This earlier CRS report has been archived and remains available as a supplementary reference source on potential Navy shipboard lasers.

potential shipboard use would be used to counter targets at short ranges of about a mile to perhaps a few miles.

Background

Strategic and Budgetary Considerations

Concern About Survivability of Navy Surface Ships

Although Navy surface ships have a number of means for defending themselves against anti-ship cruise missiles (ASCMs) and anti-ship ballistic missiles (ASBMs),[5] some observers are concerned about the survivability of Navy surface ships in potential combat situations against adversaries, such as China, that are armed with advanced ASCMs and with ASBMs.[6] Concern about this issue has led some observers to conclude that the Navy's surface fleet in coming years might need to avoid operating in waters that are within range of these weapons, or that the Navy might need to move toward a different fleet architecture that relies less on larger surface ships and more on smaller surface ships and submarines.[7] Such changes in Navy operating areas and fleet architecture could substantially affect U.S. military strategy and the composition of the Navy's shipbuilding expenditures.

Navy surface fleet leaders in early 2015 announced a new organizing concept for the Navy's surface fleet called distributed lethality. Under distributed lethality, offensive weapons such as ASCMs are to be distributed more widely across all types of Navy surface ships, and new operational concepts for Navy surface ship formations are to be implemented. The aim of distributed lethality is to boost the surface fleet's capability for attacking enemy ships and make it less possible for an enemy to cripple the U.S. fleet by concentrating its attacks on a few very-high-value Navy surface ships (particularly the Navy's aircraft carriers).[8] Perspectives on whether

[5] These include the following: operating ships in ways that make it hard for others to detect and accurately track Navy ships; jamming or destroying enemy targeting sensors; interfering with the transmission of targeting data from sensors to weapon launchers; attacking weapon launchers (which can land-based launchers or launchers on surface ships, submarines, or aircraft); and countering ASCMs and ASBMs headed toward Navy ships. Navy measures for countering ASCMs and ASBMs headed toward Navy ships include the following: jamming a missile's guidance system; using decoys of various kinds to lure enemy missiles away from Navy ships; and shooting down enemy missiles with surface-to-air missiles and the Phalanx Close-In Weapon System (CIWS), which is essentially a radar-controlled Gatling gun. Employing all these measures reflects a long-standing Navy approach of creating a multi-layered defense against enemy missiles, and of attacking the enemy's "kill chain" at multiple points so as to increase the chances of breaking the chain. (The kill chain is the sequence of steps that an enemy must complete to conduct a successful missile attack on a Navy ship. This sequence includes, at a basic level of description, detecting and tracking the Navy ship, passing that information from sensors to the weapon launcher, launching the weapon, and guiding the weapon all the way to the Navy ship. Interfering with any one of these actions can break the kill chain and thereby prevent or defeat the attack.)

[6] See, for example, Andrew F. Krepinevich, Maritime Warfare in a Mature Precision-Strike Regime, Washington, Center for Strategic and Budgetary Assessments, 2014, 128 pp. For more on China's ASCMs and ASBMs, see CRS Report RL33153, *China Naval Modernization: Implications for U.S. Navy Capabilities—Background and Issues for Congress*, by Ronald O'Rourke.

ASCMs and ASBMs are not the only reasons that some observers are concerned about the future survivability of U.S. Navy surface ships in combat situations; observers are also concerned about threats to U.S. Navy surface ships posed by small boats, mines, and torpedoes.

[7] See, for example, Phillip E. Pournelle, "The Deadly Future of Sea Control," *U.S. Naval Institute Proceedings*, July 2015: 26-31.

[8] See, for example, Thomas Rowden, Peter Gumataotao, and Peter Fanta, "Distributed Lethality," *U.S. Naval Institute Proceedings*, January 2015: 18-23; Sam LaGrone, "SNA: Navy Surface Leaders Pitch More Lethal Ships, Surface (continued...)

it would be cost effective to spend money spreading offensive weapons across a wider array of Navy surface ships might be influenced by views on whether those surface ships can adequately defend themselves against enemy missiles.

Depth of Magazine and Cost Exchange Ratio

Two key limitations that Navy surface ships currently have in defending themselves against ASCMs and ASBMs are limited depth of magazine and unfavorable cost exchange ratios. Limited depth of magazine refers to the fact that Navy surface ships can use surface-to-air missiles (SAMs) and their Close-in Weapon System (CIWS) Gatling guns to shoot down only a certain number of enemy unmanned aerial vehicles (UAVs) and anti-ship missiles before running out of SAMs and CIWS ammunition[9]—a situation (sometimes called "going Winchester") that can require a ship to withdraw from battle, spend time travelling to a safe reloading location (which can be hundreds of miles away),[10] and then spend more time traveling back to the battle area.

Unfavorable cost exchange ratios refer to the fact that a SAM used to shoot down a UAV or anti-ship missile can cost the Navy more (perhaps much more) to procure than it cost the adversary to build or acquire the UAV or anti-ship missile. In the FY2018 defense budget, procurement costs for Navy SAMs range from about $976,000 per missile to several million dollars per missile, depending on the type.[11]

In combat scenarios against an adversary with a limited number of UAVs and anti-ship missiles, an unfavorable cost exchange ratio can be acceptable because it saves the lives of Navy sailors and prevents very expensive damage to Navy ships. But in combat scenarios (or an ongoing military capabilities competition) against a country such as China that has many UAVs and anti-ship missiles and a capacity for building or acquiring many more, an unfavorable cost exchange ratio can become a very expensive—and potentially unaffordable—approach to defending Navy

(...continued)

Action Groups," *USNI News*, January 14, 2015; Kris Osborn, "Navy Unveils New Surface Warfare Strategy," *Military.com*, January 14, 2015; Sydney J. Freedberg Jr., "'If It Floats, It Fights,': Navy Seeks 'Distributed Lethality,'" *Breaking Defense*, January 14, 2015; Mike McCarthy and Megan Eckstein, "Navy Eyeing A 'Hunter Killer' Surface Fleet, Would Require Upgunning Existing Ship Fleets," *Defense Daily*, January 15, 2015: 1-3; Richard Scott, "Offensive Language: USN Sets Out Surface Firepower Strategy," *Jane's International Defence Review*, May 2015: 42-47; Megan Eckstein, "Navy Studying Implications of Distributed Lethality in Wargames Series," *USNI News*, July 9, 2015; Lara Seligman, "Navy Establishes Task Force To Study Impact of Distributed lethality," *Inside the Navy*, July 10, 2015.

[9] Navy cruisers have 122 missile cells; Navy destroyers have 90 or 96 missile cells. Some of these cells are used for storing and launching Tomahawk land attack cruise missiles or anti-submarine rockets. The remainder are available for storing and launching SAMs. A Navy cruiser or destroyer might thus be armed with a few dozen or several dozen SAMs for countering ASCMs and ASBMs. Countering ASCMs or ASBMs with SAMs might sometimes require shooting two SAMs at each ASCM or ASBM.

[10] The missile cells on a Navy cruiser or destroyers are clustered together in an installation called a Vertical Launch System (VLS). VLS cells cannot be reloaded while the ship is underway; a ship needs to return to a port or a calm anchorage to reload its VLS.

[11] Unit procurement costs for ship-launched SAMs in the FY2018 are as follows: about $976,000 for the Rolling Airframe Missile (RAM), about $1.75 million to about $2.5 million for the Evolved Sea Sparrow Missile (ESSM), about $4.4 million for the SM-6 Block 1 missile, and about $12.5 million for the SM-3 Block 1B missile. RAM and ESSM are short-range missiles for defense against aircraft and ASCMs. The SM-6 Block 1 is a medium-range missile used for both defense against aircraft and ASCMs, and terminal (i.e., endo-atmospheric) defense against theater-range ballistic missiles. The SM-3 Block 1B is used for mid-course (i.e., exo-atmospheric) defense against theater-range ballistic missiles.

surface ships against UAVs and anti-ship missiles, particularly in a context of constraints on U.S. defense spending and competing demands for finite U.S. defense funds.

SSLs, EMRG, and HVP offer a potential for dramatically improving depth of magazine and the cost exchange ratio:

- **Depth of magazine.** SSLs are electrically powered, drawing their power from the ship's overall electrical supply, and can be fired over and over, indefinitely, as long as the SSL continues to work and the ship has fuel to generate electricity. The EMRG's projectile and the HVP (which are one and the same—see next section) can be stored by the hundreds in a Navy surface ship's weapon magazine.[12]
- **Cost exchange ratio.** An SSL can be fired for a marginal cost of less than one dollar per shot (which is the cost of the fuel needed to generate the electricity used in the shot), while the EMRG's projectile/HVP has an estimated unit procurement cost of about $25,000.[13]

SSLs, EMRG, and HVP in Brief

SSLs

Overview

The Navy in recent years has leveraged both significant advancements in industrial SSLs and decades of research and development work on military lasers done by other parts of DOD to make substantial progress toward deploying high-energy SSLs on Navy surface ships.[14] Navy surface ships would use high-energy SSLs initially for countering small boats, UAVs, and intelligence, surveillance, and reconnaissance (ISR) sensors, and potentially in the future for countering ASCMs and ASBMs as well.[15] High-energy SSLs on Navy ships would generally be short-range defensive weapons—they would generally counter targets at ranges of about one mile to perhaps eventually a few miles.

In addition to a low marginal cost per shot and deep magazine, potential advantages of shipboard lasers include fast engagement times, an ability to counter radically maneuvering missiles, an

[12] In July 2015, the Navy issued a request for information (RFI) to industry for the fabrication of a prototype EMRG mount that would store a minimum of 650 rounds. (RFI for Fabrication of Prototype Mount for Naval Railgun, Solicitation Number: N00024-15-R-4132, FedBizOpps.gov, July 29, 2015. See also Justin Doubleday, "Navy Developing Integrated Mount For Electromagnetic Railgun," *Inside the Navy*, July 31, 2015.)

[13] Sources for cost of HVP: David Martin, "Navy's Newest Weapon Kills at Seven Times the Speed of Sound," CBS News (cbssnews.com), April 7, 2014; Kris Osborn, "Navy Will Test its Electromagnetic Rail Gun aboard DDG 1000," *DefenseTech*, April 15, 2015.

[14] In discussions of potential Navy shipboard lasers, a high-energy laser is generally considered to be a laser with a beam power of at least 10 kilowatts (kW).

The Navy has also performed research and development work on a different kind of laser, called the free electron laser (FEL). In recent years, Navy research and development work on potential shipboard lasers has shifted more to SSLs. For background information on the FEL, see CRS Report R41526, *Navy Shipboard Lasers for Surface, Air, and Missile Defense: Background and Issues for Congress*, by Ronald O'Rourke.

[15] In general, lasers would counter small boats and missiles by heating and burning holes in their skins, and causing thermal damage to their interiors. Lasers can also be used to "dazzle" (i.e., interfere with) electro-optical sensors on a boat or missile.

ability to conduct precision engagements, and an ability to use lasers for graduated responses ranging from detecting and monitoring targets to causing disabling damage. Potential limitations of shipboard lasers relate to line of sight; atmospheric absorption, scattering, and turbulence (which prevent shipboard lasers from being all-weather weapons); an effect known as thermal blooming that can reduce laser effectiveness; countering saturation attacks; possible adversary use of hardened targets and countermeasures; and risk of collateral damage, including damage to aircraft and satellites and permanent damage to human eyesight, including blinding. These potential advantages and limitations are discussed in greater detail in the **Appendix**.

Selected Key Developments with LaWS and MLD in 2009-2014

Key developments in the Navy's high-energy SSL development effort in 2009-2014 include the following:

- Between 2009 and 2012, the Navy successfully tested a prototype SSL called the Laser Weapon System (LaWS) against UAVs in a series of engagements that took place initially on land and subsequently on a Navy ship at sea. LaWS has a reported beam power of 30 kilowatts (kW).[16]
- Between 2010 and 2011, the Navy tested another prototype SSL called the Maritime Laser Demonstration (MLD) in a series of tests that culminated with an MLD installed on a Navy ship successfully engaging a small boat.
- In April 2013, the Navy announced that it planned to install LaWS on the USS *Ponce* (pronounced pon-SAY)—a converted amphibious ship that is operating in the Persian Gulf as an interim Afloat Forward Staging Base (AFSB[I])[17]—to conduct evaluation of shipboard lasers in an operational setting against swarming boats and swarming UAVs.[18] The system was installed in August 2014 (see **Figure 1**, **Figure 2**, and **Figure 3**).
- In December 2014, the Navy declared LaWS on the *Ponce* to be an "operational" system.[19] *Ponce* remained in the Persian Gulf until it was relieved in September

[16] See, for example, Mike McCarthy, "Navy Authorized To Use Ship-Based Laser In Battle," *Defense Daily*, December 11, 2014: 3.

[17] As an interim AFSB, *Ponce* operated in the Persian Gulf as a "mother ship" for Navy helicopter and small boat operations. Ships referred to as AFSBs are now referred to as Expeditionary Sea Base ships (ESBs).

[18] "Navy Leaders Announce Plans for Deploying Cost-Saving Laser Technology," *Navy News Service*, April 8, 2013; Thom Shanker, "Navy Deploying Laser Weapon Prototype Near Iran," *New York Times*, April 9, 2013: 4; Mike McCarthy, "Navy Deploying Laser For Taking Out Drones," *Defense Daily*, April 9, 2013; Graham Warwick, "U.S. Navy Planning Gulf Deployment For Laser Weapon," *Aerospace Daily & Defense Report*, April 9, 2013: 6; Megan Eckstein, "Navy-Built Laser Weapon System Will Begin Demo On Ponce In Early 2014," *Inside the Navy*, April 15, 2013. See also Lara Seligman, "Navy-built LaWS To Begin Demo This Summer, IOC Slated For FY-20-21," *Inside the Navy*, March 24, 2014; Office of Naval Research, "All Systems Go: Navy's Laser Weapon Ready for Summer Deployment," *Navy News Service*, April 7, 2014.

Swarming refers to the use of boats and UAVs in large numbers, or swarms, in an attempt to confuse and overwhelm a target ship's defensive systems.

[19] A December 11, 2014, press report stated

> The Navy's first-of-a-kind laser deployed on a vessel sailing in the Persian Gulf has been declared operational and can be used by the crew to defend itself against potential threats, the service's head of the Office of Naval Research said on Wednesday [December 10, 2014].
>
> Rear Adm. Matthew Klunder told reporters on a conference call that Central Command has been green lighted to use the laser in the event of a threat, approval that has been passed along to the ship's commanding officer. The 30-kilowatt laser, known as the Laser Weapon System, or LaWS,

(continued...)

2017 by its replacement, the new-construction Expeditionary Sea Base ship *Lewis B. Puller* (ESB-3). *Ponce* returned to the United States and was decommissioned in October 2017; LaWS was not transferred from *Ponce* to *Lewis B. Puller*.[20]

Figure 1. Laser Weapon System (LaWS) on USS *Ponce*

Source: Navy photograph dated November 16, 2014, accompanying David Smalley, "Historic Leap: Navy Shipboard Laser Operates in Arabian Gulf," *Navy News Service*, December 10, 2014, accessed August 12, 2015, at http://www.navy.mil/list_all.asp?id=84805.

(...continued)

> was installed on the USS Ponce in August [2014].
>
> The ship later departed for the Persian Gulf and the LaWS successfully carried out operational testing recently by striking a fast attack boat and drone, Klunder said, adding that this marks the "historic" first ever operational deployment of a directed energy weapon.
>
> (Mike McCarthy, "Navy Authorized To Use Ship-Based Laser In Battle," *Defense Daily*, December 11, 2014: 3. See also Sam LaGrone, "U.S. Navy Allowed to Use Persian Gulf Laser for Defense," *USNI News*, December 10, 2014; Philip Ewing, "Navy Declares Laser Weapon 'Operational,'" *Politico Pro (Pro Defense Report)*, December 10, 2014.)

The Navy testified on February 24, 2016, that

> the Solid State Laser Quick Reaction Capability (SSL-QRC) was fielded as a science and technology demonstration aboard the USS PONCE. It was successfully demonstrated as an effective weapon system and was subsequently transitioned to the fleet in the Central Command area of responsibility and is now an operational system.
>
> (Statement of Rear Admiral Mathias W. Winter, United States Navy, Chief of Naval Research, Before the Emerging Threats and Capabilities Subcommittee of the House Armed Services Committee on The Fiscal Year 2017 Budget Request, February 24, 2016, p. 15.)

[20] Sam LaGrone, "USS Ponce Returns From Final Deployment Ahead of Decommissioning," *USNI News*, September 28, 2017.

Figure 2. Laser Weapon System (LaWS) on USS *Ponce*

Source: Navy photograph dated November 17, 2014, accompanying David Smalley, "Historic Leap: Navy Shipboard Laser Operates in Arabian Gulf," *Navy News Service*, December 10, 2014, accessed August 12, 2015, at http://www.navy.mil/list_all.asp?id=84805.

SSL Technology Maturation (SSL-TM) Program

As a follow-on effort to LaWS and MLD, the Navy initiated the SSL Technology Maturation (SSL-TM) program, in which industry teams led by BAE Systems, Northrop Grumman, and Raytheon, among others, competed to develop a shipboard laser with a beam power of 100 kW to 150 kW, which would provide increased effectiveness against small boats and UAVs.[21]

(Boosting beam power further—to something between 150 kW and 300 kW—could permit a laser to counter at least some ASCMs. Even stronger beam powers—on the order of at several hundred kW, if not one megawatt [MW] or more—could improve a laser's effectiveness against ASCMs and perhaps enable it to counter ASBMs.[22])

[21] For more on the SSL-TM program, see Office of Naval Research, "Solid-State Laser Technology Maturation Program," accessed August 11, 2015, at http://www.onr.navy.mil/Media-Center/Fact-Sheets/Solid-State-Laser-Technology-Maturation-Program.aspx; Office of Naval Research, "Solid State Laser Technology Maturation Program," September 2012, accessed August 11, 2015, at http://www.onr.navy.mil/~/media/Files/Fact-Sheets/35/Solid-State-Laser-Technology-Maturation-Program-2012-a.ashx; Office of Naval Research, "Research and Development/Technology Maturation of Solid State High Power Laser Weapon Systems, Subsystems, and/or Components for Surface Navy, USN, Broad Agency Announcement (BAA)," ONR BAA # 12-019, 2012, accessed August 11, 2015, at http://www.onr.navy.mil/~/media/files/funding-announcements/baa/2012/12-019.ashx; Future Force, "Developing a High-Energy Laser for the Navy," January 23, 2015, accessed August 11, 2015, at http://futureforce.navylive.dodlive.mil/2015/01/high-energy-laser/.

[22] For additional discussion, see CRS Report R41526, *Navy Shipboard Lasers for Surface, Air, and Missile Defense: Background and Issues for Congress*, by Ronald O'Rourke, particularly the section entitled "Required Laser Power Levels for Countering Targets" and Appendix A on "Laser Power Levels Required to Counter Targets."

Figure 3. Laser Weapon System (LaWS) on USS *Ponce*

Source: Navy photograph dated November 16, 2014, accompanying David Smalley, "Historic Leap: Navy Shipboard Laser Operates in Arabian Gulf," *Navy News Service*, December 10, 2014, accessed August 12, 2015, at http://www.navy.mil/list_all.asp?id=84805.

On October 22, 2015, DOD announced that it had selected Northrop Grumman as the winner of the SSL-TM competition. DOD's contract-award announcement stated:

> Northrop Grumman Space and Mission Systems Corp., Redondo Beach, California, is being awarded a $53,151,809 cost-plus-fixed-fee contract for the Solid State High Power Laser Weapon System Demonstrator (LWSD) program.... The Office of Naval Research seeks to continue the advancement of SSL weapon system designs, architectures, and component technologies. The government believes that improvements in lethality may be achieved through maturation and optimization of a variety of system characteristics, including laser power, beam quality, beam director architecture, and other physical and optical aspects of the laser, beam director, and system design. Leveraging our experience and internal investments, the Northrop Grumman team is ready to fully support the three phases of the LWSD program. This contract contains options, which if exercised, will bring the contract value to $91,057,597. Work will be performed in Redondo Beach,

> California, and is expected to be completed Oct. 21, 2016. If options are exercised, work will continue through July 7, 2018.... This contract was competitively procured under the Office of Naval Research broad agency announcement 15-0005 entitled "Solid State, High Power Laser Weapon System Demonstrator (LWSD) Design, Development and Demonstration for Surface Navy, USN." Six proposals were received in response to this solicitation.[23]

A December 22, 2015, Northrop Grumman news release about the October 22, 2016, contract award stated:

> During Phase 1 of the LWSD contract, Northrop Grumman will develop a detailed design for the new system. Phase 2 will include assembly and ground test of the system, while Phase 3 will comprise at-sea testing of the system aboard the Navy's Self Defense Test Ship (SDTS). The Navy will lead this testing with Northrop Grumman providing technical support. The SDTS is the former USS Paul F. Foster (DD-964).
>
> According to Renard, Northrop Grumman's LWSD is well suited to support the Navy's planned initial testing on the SDTS. The company has designed its system to be installed, however, with minimal modification or additional costs, for demonstration on the Navy's DDG-51 FLT II class destroyers.[24]

Figure 4 shows an artist's rendering of LWSD installed on the Navy's Self Defense Test Ship (the USS *Paul F. Foster* [DD-964], an old Spruance [DD-963] class destroyer).

Figure 4. Laser Weapon System Demonstrator (LWSD) on Self Defense Test Ship

Artist's rendering

Source: Cropped version of image accessed on March 18, 2016, at http://media.globenewswire.com/cache/189/hires/39412.jpg.

[23] DOD contract award announcements for October 22, 2015, accessed December 18, 2015, at: http://www.defense.gov/News/Contracts/Contract-View/Article/625630.

[24] "US Navy Selects Northrop Grumman to Design and Produce Shipboard Laser Weapon System Demonstrator," December 22, 2015, accessed March 18, 2016, at: http://www.globenewswire.com/newsarchive/noc/press/pages/news_releases.html?d=10158731. See also Richard Scott, "Northrop Grumman To Build on MLD for SSL Demonstrator," *IHS Jane's International Defence Review*, February 2016: 5.

Figure 5 is a detail from the previous photo.

Figure 5. Laser Weapon System Demonstrator (LWSD) on Self Defense Test Ship

Artist's rendering

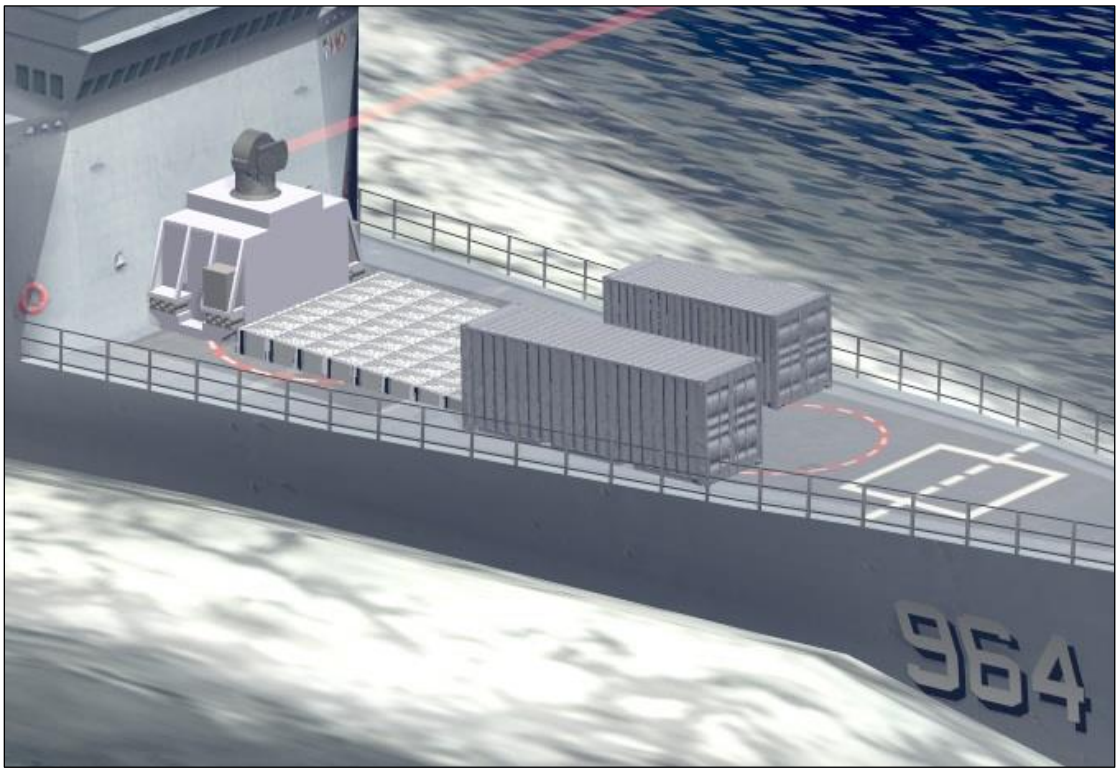

Source: Cropped version of image accessed on March 18, 2016, at http://media.globenewswire.com/cache/189/hires/39412.jpg.

A January 23, 2017, press report stated:

> The U.S. Navy is moving at warp speed to develop lasers with more lethality, precision and power sources as a way to destroy attacking missiles, drones aircraft and other threats.
>
> "We're doing a lot more with lasers," Rear Adm. Ronald Boxall, director, Surface Warfare Division, said earlier this month at the annual Surface Naval Association national symposium.
>
> The Navy plans to fire a 150-kw weapon off a test ship within a year, he said. "Then a year later, we'll have that on a carrier or a destroyer or both."...
>
> "This system employs multi-spectral target detection and track capabilities as well as an advanced off-axis beam director with improved fiber laser technologies to provide extended target engagement ranges. Improvements of high power fiber lasers used to form the laser beam enable the increased power levels and extended range capabilities. Lessons learned, operating procedures, updated hardware and software derived from previous systems will be incorporated in this demonstration," Dr. Tom Beutner, director

of the Air Warfare and Weapons branch, Office of Naval Research, told Scout Warrior in a written statement at the time of the contract announcement.[25]

Figure 6 is an Office of Naval Research (ONR) graphic illustration of the LWSD's major components.

Figure 6. ONR Graphic of LWSD Components

Artist's rendering

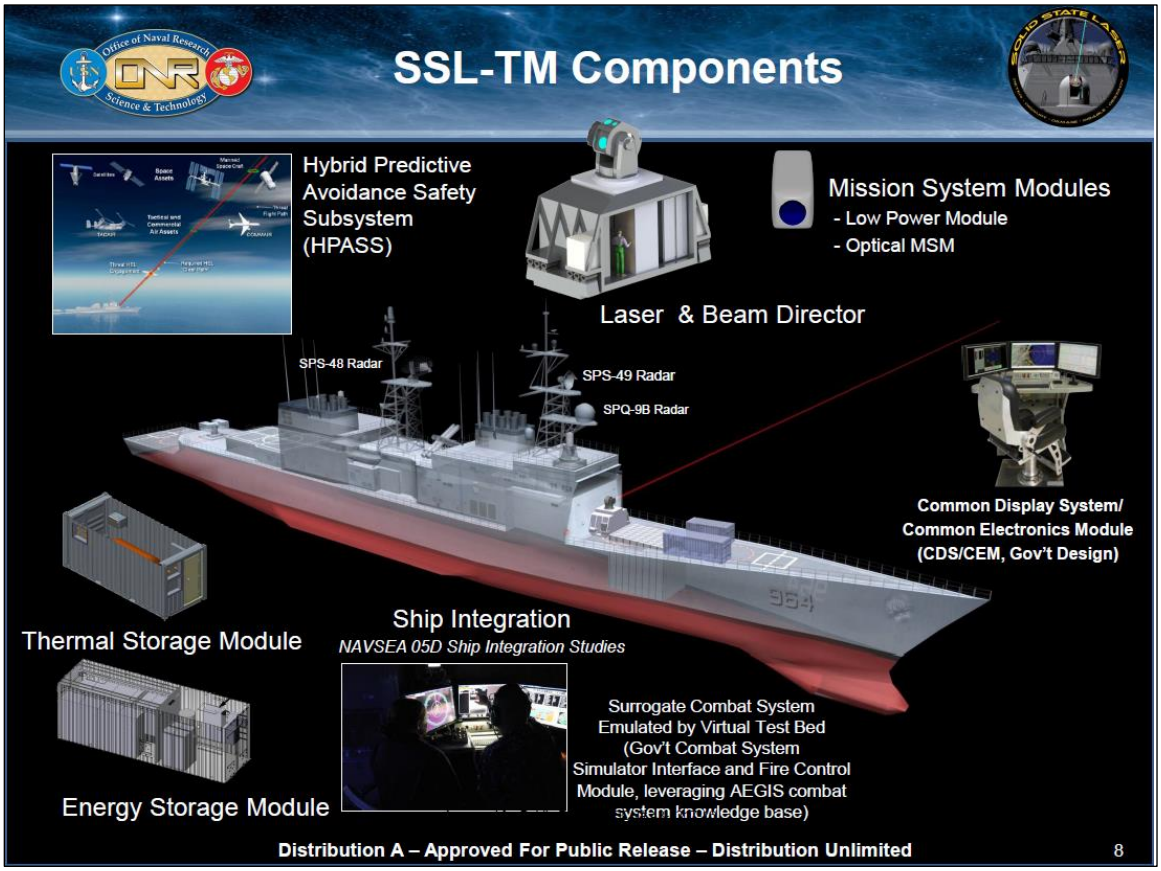

Source: Slide from February 2016 ONR briefing to CRS on SSL-TM program, received from Navy Office of Legislative Affairs February 26, 2016.

HELIOS Laser (Previously SNLWS Increment 1)

Along with SSL-TM, the Navy has initiated another effort for developing a shipboard high-energy laser. The effort was earlier referred to as Surface Navy Laser Weapon System (SNLWS) Increment 1, and is now called High Energy Laser with Integrated Optical-Dazzler and Surveillance (HELIOS).[26] The Navy states that HELIOS is focused on accelerated fielding of laser weapon systems, specifically a 60 kW-class high-energy laser (with a growth potential to 150 kW) and dazzler in an integrated weapon system, for use in countering UAVs, small boats, and ISR sensors.

[25] Michael Fabey and Kris Osborn, "Navy to Fire 150Kw Ship Laser Weapon From Destroyers, Carriers," *Scout Warrior*, January 23, 2017.

[26] The program has also been referred to by a third name—Seasaber.

HELIOS's top-level requirements were established by the Office of the Chief of Naval Operations in February 2017. Among other things, the system is to employ open architecture (as opposed to a closed or proprietary architecture) and modularity where practical to permit the system to be upgraded more easily over time. The HELIOS effort, the Navy states, has been designated as a rapid prototyping, experimentation, and demonstration (RPED) effort by the Accelerated Acquisition Board of Directors (AABoD). The Navy's proposed FY2018 budget request funding for two HELIOS units to be delivered in FY2020—one for installation on a destroyer, the other for use at a land test site. The Navy plans to hold a competition for the HELIOS effort and award a contract for the program in the third quarter of FY2018.

The Navy's effort envisages an eventual follow-on system, originally called SNLWS Increment 2, with a beam power of 150 kW to 300 kW and an ability to counter a ASCM that is flying as a crossing target, and an eventual Increment 3 version with a beam power of 500 kW or more and an ability to counter an ASCM that is flying directly at the ship.

The Navy's FY2018 budget submission programs funding for HELIOS in Project 3402 within Program Element (PE) 0603925N, a line item in the Navy's research and development account that funds work on directed energy and electric weapon systems. The Navy is requesting $63.3 million for HELIOS in FY2018 and has programmed $83.8 million for the effort in FY2019, $60.2 million in FY2020, $45.9 million in FY21, and $30.1 million in FY2022.[27]

In March 2017, the Navy released a request for information (RFI) regarding HELIOS, which stated:

> The Government is conducting market research seeking industry inputs on laser weapon system development solutions applicable to U.S. Navy guided missile destroyers (DDGs)...
>
> PEO IWS [Program Executive Office, Integrated Warfare Systems] has established an objective of developing and fielding a laser weapon system, Surface Navy Laser Weapon System (SNLWS) Increment 1, leveraging mature technology to deliver proven laser weapon capability to the Fleet. PEO IWS seeks to field the first SNLWS Increment 1 system for installation onboard a DDG 51 Flt IIA [destroyer] in shortest timeframe possible. This RFI is an effort to identify entities that could rapidly develop and field a SNLWS Increment 1, consisting of a 60 kW class High Energy Laser (HEL) or higher, along with Counter-ISR dazzling capability. The highest priority will be placed on technologically mature solutions, which minimize technical risk and enable an aggressive schedule for fielding capability to the Fleet in accordance with SECNAVINST 5000.42 on accelerated acquisitions. Priorities for this system will include technical maturity, ship integration, combat systems integration, producibility and reliability. Additionally, PEO IWS seeks concepts and interfaces to enable modularity to permit capability upgrades as technology continues to mature.[28]

Regarding its proposed FY2018 budget, the Department of the Navy states:

> ***Surface Navy Laser Weapon System***
>
> The budget requests $63.2 million in FY 2018 for the development and fielding of the Surface Navy Laser Weapon System (SNLWS) to Naval forces. SNLWS is a ship-mounted weapon system, which will include a High Energy Laser (HEL) for counter-

[27] Source for information in preceding paragraphs: Navy briefing on SNLWS to CRS and CBO, July 20, 2017.

[28] "FY18-22 Surface Navy Laser Weapon System (SNLWS) Increment I Development and Production," accessed August 14, 2017, at https://www.fbo.gov/index?s=opportunity&mode=form&id=5371fab3ac0ed2c392c7eecb69de35fb&tab=core&_cview=1.

> Unmanned Aerial Vehicle (UAV) and counter-Fast Inshore Attack Craft (FIAC) missions. In addition, SNLWS will include an integrated low power laser dazzler for counter-Intelligence, Surveillance, and Reconnaissance (ISR) missions against Unmanned Aerial System (UAS)-mounted sensors. Additional mission functionality includes combat ID and battle damage assessment. This technology has the potential to improve the ability of the Navy to defend fleet assets and maintain maritime superiority by deterring, damaging, or destroying asymmetric threats while preserving the inventory of high-value kinetic weapons to address more stressing threats.[29]

The Navy further states:

> SNLWS funding is requested for the expedited development and fielding of the SNLWS system to Naval Forces. SNLWS will include the development of an advanced prototype laser weapon system in the 60 kW or higher class. SNLWS leverages mature technology to deliver a proven laser weapon capability to the Fleet. SNLWS development leverages the Office of Naval Research (ONR) efforts on the Solid State Laser (SSL) Quick Reaction Capability (QRC) and Solid State Laser (SSL) Technology Maturation (TM) efforts. SNLWS provides a capability to address existing Low Power Module (LPM), Anti-Surface Warfare, Integrated Air and Missile Defense and Counter-Intelligence, Surveillance and Reconnaissance (C-ISR) Gaps with the ability to dazzle and destroy Unmanned Aerial Systems (UASs) and Fast Inshore Attack Craft (FIAC).[30]

A June 18, 2017, Federal Business Opportunities post stated that a Request for Proposals (RFP) for the HELIOS effort had been posted.[31] The solicitation states that responses to the RFP were due by August 18, 2017. It further states:

> The High Energy Laser with Integrated Optical-dazzler and Surveillance (HELIOS) project is focused on accelerating the fielding of laser weapon systems to the Fleet, with an incremental approach for increasing capability as laser technology continues to mature. HELIOS will leverage proven mature technology to field a 60-150 kW class High Energy Laser (HEL), along with an integrated Counter Intelligence, Surveillance, and Reconnaissance (C-ISR) laser for non-destructive dazzling capability against UAV-mounted sensors. The HELIOS project will deliver weapon systems to the Fleet as quickly and affordably as possible, providing modularity where practicable for future capability enhancements.
>
> HELIOS will initially deliver two test units in FY[20]20 (one for a DDG 51 FLT IIA [destroyer] and one at a Land Based Test Site), and will provide options for additional units in FY[20]21 and beyond. To meet accelerated program delivery timelines within fiscal constraints, HELIOS will prioritize technical maturity and proven laser weapon concepts....
>
> The purpose of this solicitation is to obtain competitive proposals for the High Energy Laser with Integrated Optical-dazzler Surveillance (HELIOS) Test Unit Development phase for two (2) Test Units and initial Production with stepladder options for up to nine (9) Production Units. The objective of the Development phase is to complete the engineering necessary to develop the two (2) HELIOS Test Units and complete all testing necessary to validate the requirements....

[29] Department of the Navy, *Highlights of the Department of the Navy FY 2018 Budget*, 2017, p. 5-3.

[30] *Department of Defense Fiscal Year (FY) 2018 Budget Estimates, Navy Justification Book Volume 2 of 5, Research, Development, Test & Evaluation, Navy Budget Activity 4*, May 2017, pp. 757-758.

[31] Federal Business Opportunities (FedBizOpps.gov—www.fbo.gov), "FY18-22 High Energy Laser with Integrated Optical-dazzler and Surveillance (HELIOS) (Formally [sic: formerly] known as SNLWS Increment 1) Development and Production Options," June 18, 2017, with subsequent amendments.

> The Government intends to evaluate proposals and award one contract for the development, production, and sustainment of HELIOS. The estimated award date is third quarter of government fiscal year 2018.[32]

A September 15, 2017, press report states that the Navy intends to obligate $1 million in FY2017 RPED funding to the HELIOS effort.[33]

Directed Energy Roadmap

In March 2014, it was reported that the Navy anticipated moving to a shipboard laser program of record in "the FY2018 time frame" and achieving an initial operational capability (IOC) with a shipboard laser in FY2020 or FY2021.[34] A July 28, 2015, press report stated:

> [Secretary of the Navy Ray] Mabus said he would release a DE [directed energy][35] roadmap this fall that "charts our course for research, development, and fielding of high power radio frequency weapons, lasers, and directed energy countermeasures. And I will follow it up with my guidance to the Program Objective Memorandum for [Fiscal Year 2018],[36] which, importantly, establishes a resource sponsor and a program of record."...
>
> Also meant to help quicken the pace of progress, the Office of Naval Research will take lessons learned from the [USS] Ponce to inform the Solid State Laser Technology Maturation program that aims to produce a 100-150 kilowatt laser prototype for at-sea testing in 2018, or sooner if possible. Rear Adm. Bryant Fuller, Naval Sea Systems Command (NAVSEA) chief engineer, said... that everything the Navy learned about rules of engagement and how to use LaWS in an operational environment would apply to larger laser weapons as well. Leveraging the operational knowledge Ponce gained will help the Navy field whatever comes out of the SSL-TM effort much more rapidly.
>
> In the meantime, Mabus said the Laser Weapon System (LaWS) will continue its work in the Middle East after early success led officials to extend its deployment.[37]

In January 2016, the Navy stated that it anticipated releasing a directed energy weapon roadmap in February 2016.[38] As of October 17, 2017, such a roadmap had not been released. In March

---

[32] Solicitation N00024-17-R-5392, June 19, 2017, available from the Federal Business Opportunities posting cited in footnote 31, pp. 31, 158.

[33] Justin Katz, "Navy Intends To Use $2 Million from RPED for Laser and Surveillance Systems," Inside the Navy, September 18, 2017.

[34] Lara Seligman, "Navy-built LaWS To Begin Demo This Summer, IOC Slated For FY-20-21," *Inside the Navy*, March 24, 2014. A program of record, or POR, is a term sometimes used by DOD officials that means, in general, a program in the Future Years Defense Plan (FYDP) that is intended to provide a new, improved, or continuing materiel, weapon, or information system or service capability in response to an approved need. The term is sometimes used to refer to a program in a service's budget for procuring and deploying an operational weapon system, as opposed to a research and development effort that might or might not eventually lead to procurement and deployment of an operational weapon system.

[35] Lasers and another class of weapons called high-power microwave (HPM) weapons are referred to collectively as directed-energy weapons because they achieve their effects by directing electromagnetic energy at their targets.

[36] The Program Objective Memorandum (POM) is an internal DOD document that guides the preparation of a budget for a particular fiscal year.

[37] Megan Eckstein, "Mabus: Adversaries Showing Interest in Directed Energy; Navy Needs to Move Faster," *USNI News*, July 28, 2015.

[38] Justin Doubleday, "Winter: Navy Directed-Energy Strategy To Be Released This Month," *Inside the Navy*, February 1, 2016.

2017, a DOD official said a directed energy roadmap (apparently one for all of DOD, not just the Navy) will likely be finished in early 2018.[39]

EMRG

In addition to SSLs, the Navy since 2005 has been developing EMRG, a cannon that uses electricity rather than chemical propellants (i.e., gunpowder charges) to fire a projectile.[40] In EMRG, "magnetic fields created by high electrical currents accelerate a sliding metal conductor, or armature, between two rails to launch projectiles at [speeds of] 4,500 mph to 5,600 mph,"[41] or roughly Mach 5.9 to Mach 7.4 at sea level.[42] Like SSLs, EMRG draws its power from the ship's overall electrical supply.[43] The Navy originally began developing EMRG as a naval surface fire support (NSFS) weapon for supporting U.S. Marines operating ashore, but subsequently determined that the weapon also has potential for defending against ASCMs and ASBMs.[44] In response to Section 243 of the FY2012 National Defense Authorization Act (H.R. 1540/P.L. 112-81 of December 31, 2011), the Navy in September 2012 submitted to the congressional defense committees a report on the EMRG development effort.[45]

Following tests with early Navy-built EMRG prototypes, the Navy funded the development of two industry-built EMRG prototype demonstrators, one by BAE Systems and the other by General Atomics (see **Figure 7** and **Figure 8**).

The two industry-built prototypes are designed to fire projectiles at energy levels of 20 to 32 megajoules,[46] which is enough to propel a projectile 50 to 100 nautical miles.[47] (Such ranges might refer to using the EMRG for NSFS missions. Intercepts of ASCMs and ASBMs might take place at much shorter ranges.) The Navy began evaluating the two industry-built prototypes in 2012.

---

[39] Jacqueline Klimas, "Pentagon to Finish Directed Energy Roadmap by Early 2018," *Politico Pro Defense Whiteboard*, March 29, 2017.

[40] Because it uses electricity rather than a powder charge to accelerate the projectile, Navy officials sometimes refer to EMRG as a launcher rather than a gun or cannon.

[41] Grace Jean, "With a Bang, Navy Begins Tests on EM Railgun Prototype Launcher," Navy News Service, February 28, 2012, accessed August 12, 2015, at http://www.navy.mil/submit/display.asp?story_id=65577.

[42] The speed of sound in air (i.e., Mach 1), varies with altitude; at sea level, it is approximately 761 miles an hour. See, for example, the table entitled "Speed of Sound at Different Altitudes," accessed August 12, 2015, at http://www.fighter-planes.com/jetmach1.htm.

[43] Unlike SSLs, however, EMRG is not a directed energy weapon, because it achieves its effects by firing a physical projectile at the target, not by directing electromagnetic energy at the target. See also footnote 35.

[44] For a recent article discussing the use of EMRG in countering ASCMs and ASBMs, see Sam LaGrone, "Navy Wants Rail Guns to Fight Ballistic and Supersonic Missiles Says RFI," *USNI News*, January 5, 2015.

[45] U.S. Navy, *Electromagnetic Railgun System: Final Report to the Congressional Defense Committees*, August 2012, with cover letters dated September 18, 2012. For a press report discussing the Navy's report to Congress, see Dan Taylor, "Stackley: Navy Identifies Four Technical Hurdles To Railgun Development," *Inside the Navy*, November 19, 2012.

[46] The Navy states that "a megajoule is a measurement of energy associated with a mass traveling at a certain velocity. In simple terms, a one-ton vehicle moving at 100 mph equals a magajoule of energy." (Office of Naval Research Public Affairs, "Navy Sets New World Record with Electromagnetic Railgun Demonstration," *Navy News Service*, December 10, 2010, accessed August 12, 2015, at http://www.navy.mil/submit/display.asp?story_id=57690.)

[47] Grace Jean, "With a Bang, Navy Begins Tests on EM Railgun Prototype Launcher," Navy News Service, February 28, 2012, accessed August 12, 2015, at http://www.navy.mil/submit/display.asp?story_id=65577.

Figure 7. Industry-Built EMRG Prototype Demonstrator

BAE prototype

Source: Navy photograph dated July 8, 2014, associated with Office of Naval Research Public Affairs, "From Research to Railgun: Revolutionary Weapon at Future Force EXPO," *Navy News Service*, January 13, 2015, accessed August 12, 2015, at http://www.navy.mil/submit/display.asp?story_id=85166.

Figure 8. Industry-Built EMRG Prototype Demonstrator

General Atomics prototype

Source: Navy photograph dated July 8, 2014, accessed August 12, 2015, at http://www.navy.mil/view_image.asp?id=180994.

In January 2015, it was reported that the Navy was projecting that EMRG could become operational on a Navy ship between 2020 and 2025.[48] In April 2015, it was reported that the Navy was considering installing an EMRG on a Zumwalt (DDG-1000) class destroyer by the mid-2020s.[49] A February 27, 2017, press report stated that

> a new full and open competition is in the works for the railgun. While the Office of Naval Research and several companies will continue their development of the railgun and projectile, [Naval Sea Systems Command spokeswoman Christianne] Witten said the program office is planning to hold a new competition for the technologies prior to them entering the engineering and manufacturing development phase of the acquisition process, known as "milestone B."
>
> "The railgun acquisition program will avoid being 'locked in' to proprietary solutions for key system components," Witten wrote. "It is the Navy's objective to leverage the industry competition that ONR initially held for the subsystems of pulse power, barrel technology maturation and projectiles. Another round of system full and open competition is planned at milestone B."[50]

A July 21, 2017, press report stated:

> The U.S. Office of Naval Research (ONR) is proceeding in its electromagnetic railgun research and expects to reach a capacity of 10 rounds per minute with a 32 Mega-Joule muzzle launch for each round, officials said Thursday [July 20].
>
> Dr. Thomas Beutner, department head of Code 35 in ONR's Naval Air Warfare and Weapons Department, told reporters that the railgun research is going well and has made several scientific advances....
>
> Tom Boucher, program officer at Code 35 said the ONR S&T program calls for a maturation of achieving 10 rounds per minute at 32 megajoules by fiscal year 2019. To reach that goal, ONR is building a series of barrels and incorporating lessons learned. They will achieve the full rep-rate and muzzle energy in 2018 and in 2019 demonstrate the longest life of a barrel at that muzzle energy.
>
> After reaching these goals the S&T portion of the program should be complete. Separately the Navy's Program Executive Office Integrated Warfare Systems (PEO IWS) will look at shipboard integration if the Navy decides to do that and that office will make any follow-on acquisition decisions, Boucher said....
>
> ONR's rep-rate composite launcher, which can repeat launches quicker than other test devices, will be able to achieve the 10 round-per-minute rate the program seeks by later this summer. ONR plans to gradually ramp up this launcher to higher rep-rate and energy levels through the end of the year, Beutner said.
>
> He also talked about how ONR has demonstrated the ability to use pulse power, having fired 5,000 pulse shots. For the rep-rate firing, ONR has to use a larger energy farm or capacitor base resulting in pulse power using over one megajoule per cubic meter energy density.

---

[48] Sam LaGrone, "Navy Wants Rail Guns to Fight Ballistic and Supersonic Missiles Says RFI," *USNI News*, January 5, 2015.

[49] Sam LaGrone, "Navy Considering Railgun for Third Zumwalt Destroyer," *USNI News*, February 5, 2015 (updated February 11, 2015); Mike McCarthy, "Navy Aiming To Put Railgun On Third Zumwalt Destroyer," *Defense Daily*, February 6, 2015; Kris Osborn, "Navy Will Test its Electromagnetic Rail Gun aboard DDG 1000," *DefenseTech*, April 15, 2015. For more on Zumwalt-class destroyers, see CRS Report RL32109, *Navy DDG-51 and DDG-1000 Destroyer Programs: Background and Issues for Congress*, by Ronald O'Rourke.

[50] Justin Doubleday, "Laser, Railgun Programs Transitioned to Navy Acquisition Offices," *Inside the Navy*, February 27, 2017.

> "That's an important scientific advance in terms of energy density in those capacitors, but even more important that's a size factor that will fit into the ships. Both crewed combatants and future combatants," Beutner said.[51]

HVP

Overview

As the Navy was developing EMRG, it realized that the guided projectile being developed for EMRG could also be fired from 5-inch and 155mm powder guns. Navy cruisers each have two 5-inch guns, and Navy Arleigh Burke (DDG-51) class destroyers each have one 5-inch gun. The Navy's three new Zumwalt class (DDG-1000) destroyers, the first of which entered service in October 2016, each have two 155mm guns.

The projectile, which weighs about 23 pounds,[52] is a hypervelocity projectile when fired from either EMRG or a powder gun, but the term HVP tends to be used more frequently in connection with the concept of firing it from a powder gun. The Navy described HVP in September 2012 as

> a next generation, common, low drag, guided projectile capable of completing multiple missions for gun systems such as the Navy 5-Inch, 155-mm, and future railguns. Types of missions performed will depend on gun system and platform. The program goal is to address mission requirements in the areas of Naval Surface Fire Support, Cruise Missile Defense, Anti-Surface Warfare, and other future Naval mission areas. Mission performance will vary from gun system, launcher, or ship. HVP's low drag aerodynamic design enables high velocity, maneuverability, and decreased time-to-target. These attributes coupled with accurate guidance electronics provide low cost mission effectiveness against current threats and the ability to adapt to air and surface threats of the future.
>
> The high velocity compact design relieves the need for a rocket motor to extend gun range. Firing smaller more accurate rounds improves danger close/collateral damage requirements and provides potential for deeper magazines and improved shipboard safety. Responsive wide area coverage can be achieved using HVP from conventional gun systems and future railgun systems.

---

[51] Richard Abott, "Navy Railgun research To Reach 10 Rounds Per Minute In 2018," *Defense Daily*, July 21, 2017. See also Hope Hodge Seck, "The Navy's Railgun Will Get Faster, More Powerful This Summer," *DefenseTech*, July 21, 2017; Patrick Tucker, "The US Navy's Railgun Breakthrough Could Change Energy Storage," *Defense One*, August 2, 2017.

[52] The Navy states that HVP weighs 23 pounds. Source: David Martin, "Navy's Newest Weapon Kills at Seven Times the Speed of Sound," *CBS News (cbssnews.com)*, April 7, 2014.

BAE Systems states that HVP is 24 inches long and weighs 28 pounds, including a 15-pound payload. The total length and weight of an HVP launch package, BAE Systems states, is 26 inches and 40 pounds. BAE states that the maximum rate of fire for HVP is 20 rounds per minute from a Mk 45 5-inch gun, 10 rounds per minute from the 155mm gun on DDG-1000 class destroyers (called the Advanced Gun System, or AGS), and 6 rounds per minute from EMRG. HVP's firing range, BAE Systems states, is more than 40 nautical miles (when fired from a Mk 45 Mod 2 5-inch gun), more than 50 nautical miles (Mk 45 Mod 4 5-inch gun), more than 70 nautical miles (155mm gun on DDG-1000 class destroyers), and more than 100 nautical miles (EMRG). (BAE Systems, "Hypervelocity Projectile (HVP)," 2014, accessed August 14, 2015, at http://www.baesystems.com/download/BAES_178505/hyper-velocity-projectile-hvp-datasheet.)

In July 2015, the Navy issued a request for information (RFI) to industry for the fabrication of a prototype EMRG mount capable of handling an integrated launch weight package of 22 kg, or about 48.5 pounds. (RFI for Fabrication of Prototype Mount for Naval Railgun, Solicitation Number: N00024-15-R-4132, FedBizOpps.gov, July 29, 2015. See also Justin Doubleday, "Navy Developing Integrated Mount For Electromagnetic Railgun," *Inside the Navy*, July 31, 2015.)

> The modular design will allow HVP to be configured for multiple gun systems and to address different missions. The hypervelocity projectile is being designed to provide lethality and performance enhancements to current and future gun systems. A hypervelocity projectile for multiple systems will allow for future technology growth while reducing development, production, and total ownership costs.
>
> Research Challenges & Opportunities [include]:
>
> -- High acceleration tolerant electronic components
>
> -- Lightweight, high strength structural composites
>
> -- Miniature, high density electronic components
>
> -- Safe high energy propellants compatible with shipboard operations
>
> -- Aerothermal protection systems for flight vehicles[53]

Figure 9 and **Figure 10** show the HVP.

Figure 9. Photograph Showing HVP

Source: Navy photograph dated April 4, 2014, with a caption that reads in part: "Rear Adm. Matthew Klunder, chief of naval research, shows off a Hypervelocity Projectile (HVP) to CBS News reporter David Martin during an interview held at the Naval Research Laboratory's materials testing facility." Accessed August 12, 2015, at http://www.navy.mil/view_image.asp?id=174517.

When fired from 5-inch powder guns, the projectile achieves a speed of roughly Mach 3, which is roughly half the speed it achieves when fired from EMRG, but more than twice the speed of a

[53] Office of Naval Research, "Hypervelocity Projectile," September 2012, accessed October 21, 2016, at http://www.onr.navy.mil/~/media/Files/Fact-Sheets/35/Hypervelocity-Projectile-2012B.ashx.

conventional 5-inch shell fired from a 5-inch gun.[54] This is apparently fast enough for countering at least some ASCMs. The Navy states that "The HVP—combined with the MK 45 [5-inch gun][55]—will support various mission areas including naval surface fire support, and has the capacity to expand to a variety of anti-air threats, [and] anti-surface [missions], and could expand the Navy's engagement options against current and emerging threats."[56]

Figure 10. HVP

Source: Slide 7 from Navy briefing entitled "Electromagnetic Railgun," NDIA Joint Armaments Forum, Exhibition & Technology Demonstration, May 14, 2014, LCDR Jason Fox, USN, Assistant PM [Program Manager], Railgun Ship Integration, Distribution A, Approved for Public Release, accessed August 13, 2015, at http://www.dtic.mil/ndia/2014armaments/WedFox.pdf.

A December 21, 2016, opinion column states:

> Now the Navy is acquiring rail guns that use such energy to fire 15- to 25-pound, 18-inch projectiles at 5,000 miles per hour. They hit with the impact of a train slamming into a wall at 100 miles per hour. The high-speed, hence high-energy projectiles, which cost just $25,000, can radically improve fleet-protection capabilities: A barrage of them could counter an enemy's more expensive anti-ship missiles.

[54] Source: Sam LaGrone, "Updated: Navy Researching Firing Mach 3 Guided Round from Standard Deck Guns," *USNI News*, June 1, 2015 (updated June 2, 2015).

[55] The type of 5-inch gun on Navy cruisers and destroyers is called the Mark 45.

[56] Naval Surface Warfare Center Dahlgren Division Corporate Communications, "DEPSECDEF Loads HVP on Test Range, Observes Repetitive Rate Electromagnetic Railgun's Commissioning Series," *Navy News Service*, May 8, 2015, accessed August 12, 2015, at http://www.navy.mil/submit/display.asp?story_id=86987.

> The daunting challenge posed by defense against the proliferating threat of ballistic missiles is that it is prohibitively expensive to be prepared to intercept a swarm of incoming missiles. New technologies, however, can revolutionize defense against ballistic missiles because small, smart projectiles can be inexpensive. It takes 300 seconds to pick up such a launched missile's signature, the missile must be tracked and a vector calculated for defensive projectiles. A single 25-pound projectile can dispense more than 500 three-gram tungsten impactors and be fired at hypervelocity by electromagnetic energy. Their impact force—their mass times the square of their velocity—can destroy expensive missiles and multiple warheads.[57]

One advantage of the HVP/5-inch gun concept is that the 5-inch guns are already installed on Navy cruisers and destroyers, creating a potential for rapidly proliferating HVP through the cruiser-destroyer force, once development of HVP is complete and the weapon has been integrated into cruiser and destroyer combat systems.

Figure 11 shows HVP launch packages configured for 5-inch guns, 155mm guns, and EMRG.

Figure 11. HVP Launch Packages

Launch packages for 5-inch gun, 155mm gun, and EMRG

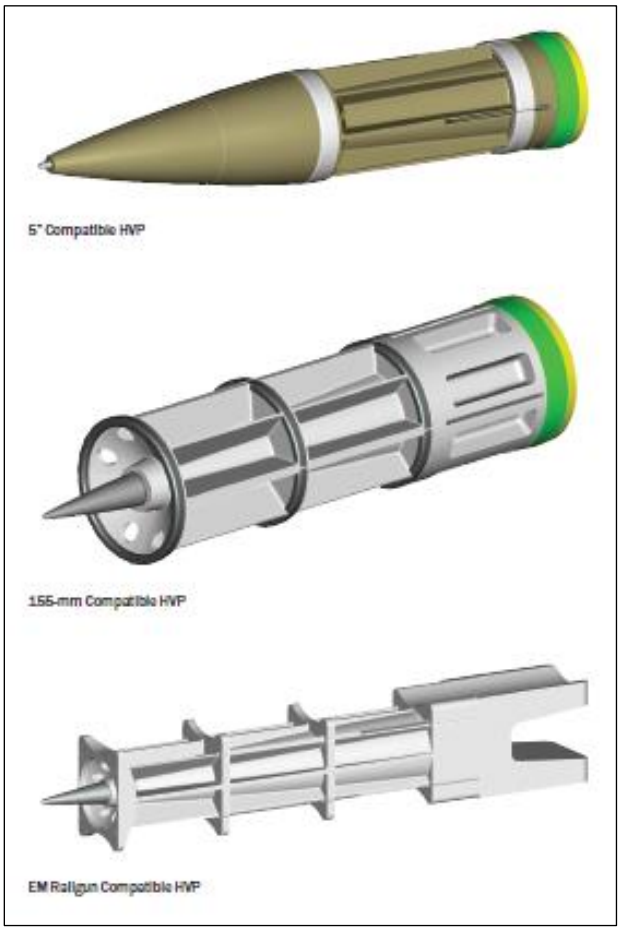

Source: BAE Systems, "Hypervelocity Projectile (HVP)," 2014, accessed August 14, 2015, at http://www.baesystems.com/download/BAES_178505/hyper-velocity-projectile--datasheet.

[57] George F. Will, "Can Mattis Make Peace Through Technology?" *Washington Post*, December 21, 2016.

Figure 12 is a slide showing the potential application of HVP to 5-inch power guns, 155mm powder guns, and EMRG. The first line of the slide, for example, discusses HVP's use with 5-inch powder guns, stating that it uses a high-explosive (HE) warhead for the NSFS mission;[58] that a total of 113 5-inch gun barrels are available in the fleet (which could be a reference to 22 cruisers with two guns each, and 69 destroyers with one gun each); and that as a game-changing capability, it is guided and can be used at ranges of up to 26 nautical miles to 41 nautical miles for NSFS operations, for countering ASCMs, and for anti-surface warfare (ASuW) operations (i.e., attacking surface ships and craft).

Figure 12. HVP Application to Various Launchers

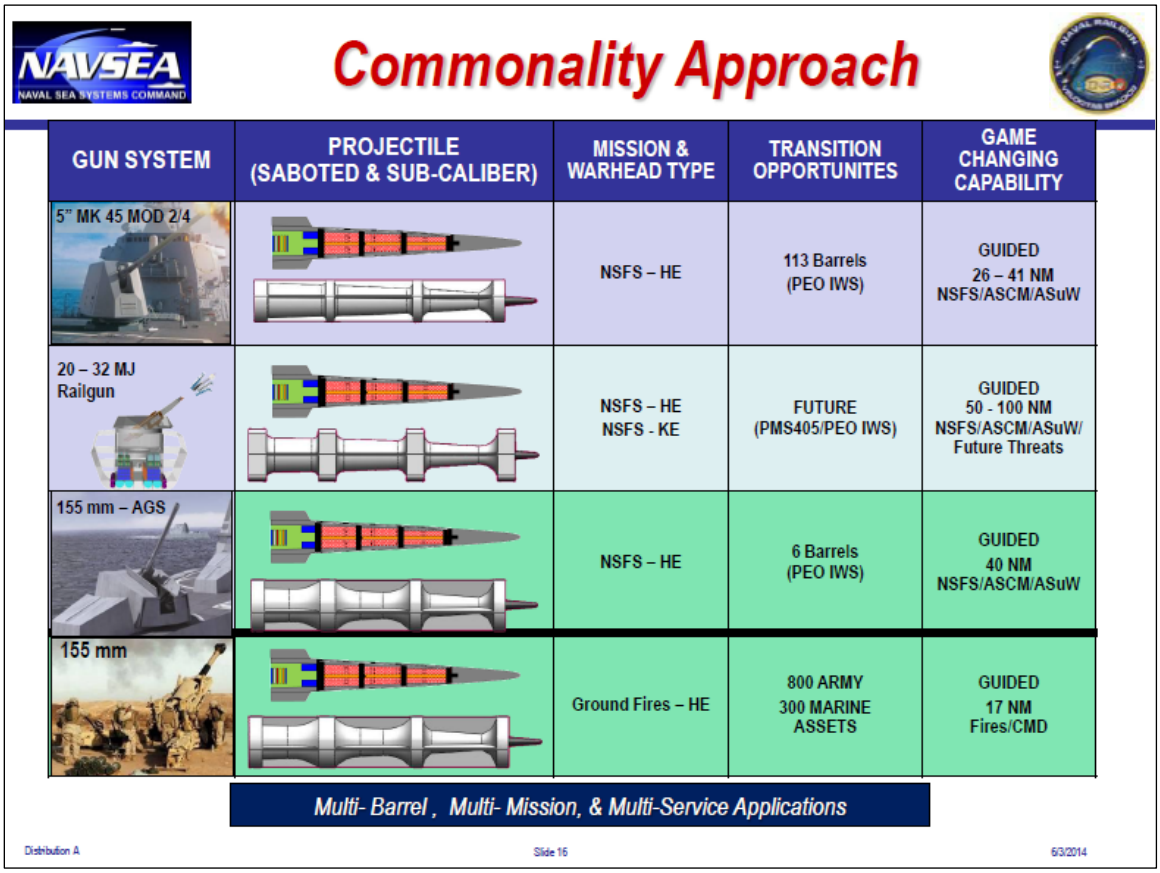

Source: Slide 16 from Navy briefing entitled "Electromagnetic Railgun," NDIA Joint Armaments Forum, Exhibition & Technology Demonstration, May 14, 2014, LCDR Jason Fox, USN, Assistant PM [Program Manager], Railgun Ship Integration, Distribution A, Approved for Public Release, accessed August 13, 2015, at http://www.dtic.mil/ndia/2014armaments/WedFox.pdf.

Figure 13 is a not-to-scale illustration of how HVPs fired from EMRGs and 5-inch guns can be used to counter various targets, including ASCMs and ASBMs.

[58] The "KE" in the next line down means that when fired from EMRG, the projectile can alternatively attack targets using its own kinetic energy (i.e., by impacting the target at hypersonic speed).

Figure 13. Navy Slide Depicting Operations Against Various Target Types

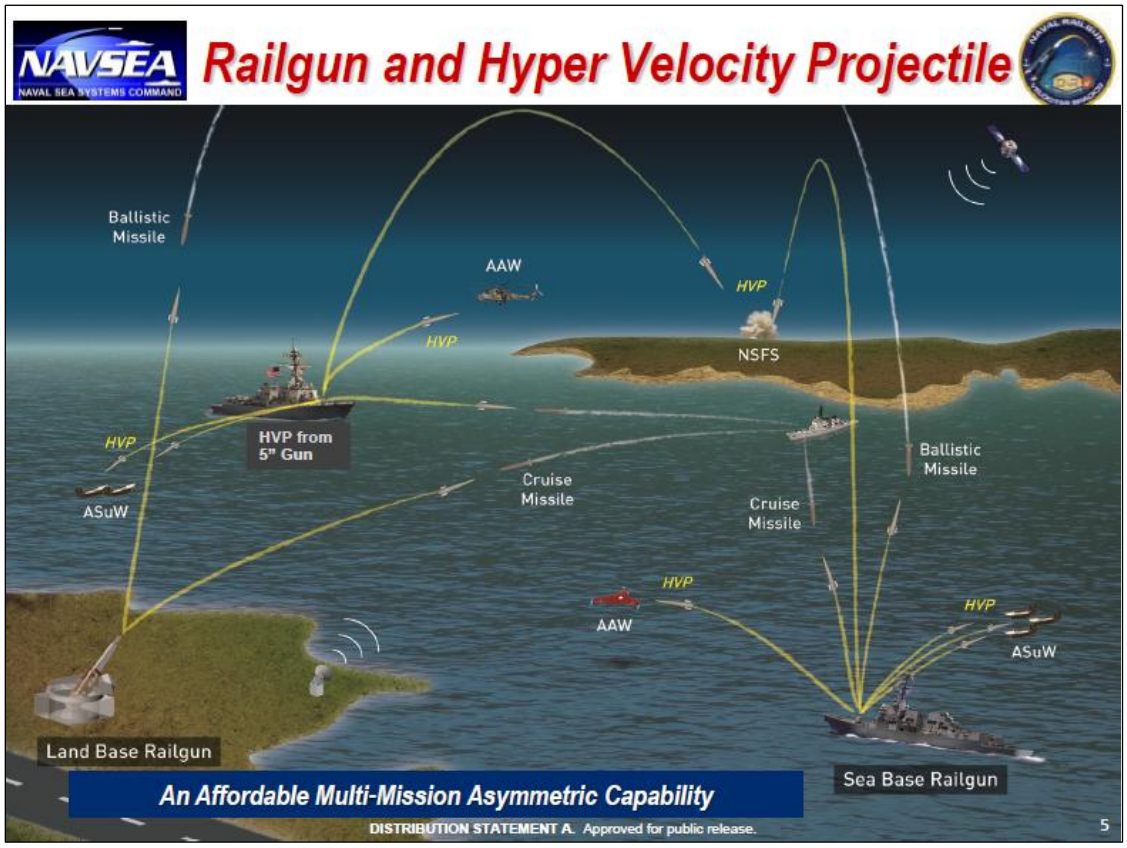

Source: Slide 5 from Navy briefing entitled "Electromagnetic Railgun," NDIA Joint Armaments Forum, Exhibition & Technology Demonstration, May 14, 2014, LCDR Jason Fox, USN, Assistant PM [Program Manager], Railgun Ship Integration, Distribution A, Approved for Public Release, accessed August 13, 2015, at http://www.dtic.mil/ndia/2014armaments/WedFox.pdf.

DOD Interest in HVP

The HPV has emerged as a program of particular interest to DOD, which is exploring the potential for using the weapon across multiple U.S. military services. An April 11, 2016, press report states:

> The Pentagon wants to take a weapon originally designed for offense, flip its punch for defense and demonstrate by 2018 the potential for the Army and Navy to conduct missile defense of bases, ports and ships using traditional field guns to fire a new hypervelocity round guided by a mobile, ground variant of an Air Force fighter aircraft radar.
>
> The Strategic Capabilities Office is working with the Army, Navy and Air Force to craft a Hypervelocity Gun Weapon System that aims, in part, to provide China and Russia an example of a secret collection of new U.S. military capabilities the Defense Department is bringing online in an effort to strengthen conventional deterrence.
>
> "It is a fantastic program," Will Roper, Strategic Capabilities Office director, said in a March 28 interview with reporters, who said the project aims "to completely lower the

> cost of doing missile defense" by defeating missile raids at a lower cost per round and, as a consequence, imposing higher costs on attackers.[59]

A May 2, 2016, press report states:

> "We thought rail guns were something we were really going to go after, but it turns out that powder guns firing the same hypervelocity projectiles gets you almost as much as you would get out of the electromagnetic rail gun, but it's something we can do much faster," [Deputy Secretary of Defense Robert] Work said. "We are going to say [to the next administration] 'Look, we believe this is the place where you want to put your money, but we're going to have enough money in there for both the electromagnetic rail gun and the powder gun.' So if the new administration says 'No really the electromagnetic rail gun is the way I want to go,' knock yourself out, we've set you up for success."[60]

A May 5, 2016, press report similarly states:

> Come January [2017], the Pentagon will almost assuredly have new leadership, complete with a new vision for how the Department of Defense should operate, organize and plan for the future.
>
> It's a reality facing down Defense Secretary Ash Carter and Deputy Secretary Bob Work as they try to complete a transformation at the Pentagon, one which both men have said is vital to making sure the US is able to maintain its technological edge against great powers like Russia and China in the future....
>
> "One of the things we have done in our program is build in a lot of different options that they [i.e., officials in the next administration] can pull levers on," Work explained.
>
> As an example, he pointed to the idea of an electromagnetic railgun. Initially, Work and his team thought that was an area that would be a major focus of development, but as they experimented they realized that a powder gun with a hypervelocity round could have almost the same impact—but at a fraction of the cost, because it did not require the development, testing and adaptation of a new gun.
>
> "We're going to say 'look, this is the place where [we think] you want to put your money,' but we're going to have enough money in both the electromagnetic railgun and the powder gun that if the new administration says 'I really want the electromagnetic railgun, this is the way I want to go,' knock yourself out," Work said. "We've set you up for success."[61]

A May 9, 2016, press report states:

> Deputy Defense Secretary Bob Work said last week that current Pentagon leaders have made investments intended to position the next presidential administration to offset expected Russian and Chinese technological advancements, specifically highlighting lessons learned about a new hypervelocity gun.
>
> Work... said one of the key findings to emerge from the effort was the Hypervelocity Gun Weapon System, which he said could be poised to displace much of what the Defense Department had planned to invest in the Navy's electromagnetic rail gun.

---

[59] Jason Sherman, "SCO Aims To Flip The Script on Missile Defense With Hypervelocity Gun," *Inside the Navy*, April 11, 2016.

[60] Scott Maucione, "DoD Is Setting Up the Third Offset for the Next President," *Federal News Radio*, May 2, 2016.

[61] Aaron Mehta, "Pentagon No. 2: How to Keep Third Offset Going in the Next Administration," *Defense News*, May 5, 2016.

> "We thought rail guns were going to be something we were really going to go after," he said, adding that "it turns out that powder guns" are capable of firing the same projectiles, at the same velocity, for far less cost.[62]

A July 18, 2016, press report states:

> The Pentagon's office tasked with tweaking existing and developing military technology for new uses is pushing development of ammo meant for the electromagnetic railgun for use in existing naval guns and artillery pieces....
>
> About year and a half ago, researchers at the Pentagon's Strategic Capabilities Office and inside the service realized that there was more short-term promise for not only the Navy but the Army to use the Hyper Velocity Projectiles (HVP) rounds overseen by the Office of Naval Research (ONR) in both services existing powder guns, said SCO [Strategic Capabilities Office] head William Roper said last week.
>
> "To me they were just interesting test articles a few years ago, but thanks to that service input and us funding some high-risk demonstration we now think that we can do pretty revolutionary things with existing powder guns—think howitzers, Paladins, the Navy's five-inch guns. We've shifted emphasis to that," Roper said during a Wednesday talk at the Center for Strategic and International Studies (CSIS).
>
> "Not that we're not interested in railgun—we are—but if you look at the delta between fielding in quantity—we have [more than] a 1,000 powder guns, we have very few railguns."...
>
> The SCO-led research effort will work to create HVP sensor and a fire control regime that will find its way eventually to the railgun project, Roper said.
>
> "So when the railgun is ready to field it will be able to just be dropped in place as a better launcher as opposed to being a great technology that we have to build a new architecture for," he said.
>
> "We're going to take the bet and let's see if we can field this and let's completely flip the paradigm of missile defense."[63]

A September 19, 2016, press report states:

> After much deliberation, both public and private, the Pentagon, which has shifted emphasis away from the electromagnetic rail gun as a next-generation missile defense platform, sees a new hypervelocity powder gun technology as the key to demonstrating to potential adversaries like China and Russia that U.S. military units on land and sea can neutralize large missile salvos in future conflicts....
>
> "If you do that, you change every 155 [mm] howitzer in the U.S. Army in every NATO country into a cruise missile and tactical ballistic missile defender and, oh by the way, you extend their offensive range," [Deputy Secretary of Defense Robert] Work said.

The article states that Work "is pushing hard to lay the groundwork for the next presidential administration to conduct a military exercise called 'Raid Breaker' that would demonstrate the capabilities of the Hypervelocity Gun Weapon System program." It quotes him as stating that if DOD conducted such an exercise against 100 cruise missiles and ballistic missiles, "and were able to convince [potential adversaries] that we're able to knock down 95 to 98 of them, then that

[62] Tony Bertuca, "Work: New Hypervelocity Gun Could Displace Rail Gun in Next Administration," *Inside the Navy*, May 9, 2016.

[63] Sam LaGrone, "Pentagon: New Rounds For Old Guns Could Change Missile Defense for Navy, Army," *USNI News*, July 16, 2016 (updated July 19, 2016).

would have an enormous impact on the competition in the Pacific, on the competition in Europe and would [clearly] improve conventional deterrence." It further quotes him as stating that DOD's modeling shows that "if we can close the fire support with a controlled solution," the weapon would be able to shoot down most of a 100-missile raid.[64]

A May 19, 2017, press report states:

> An Army Howitzer is now firing a super high-speed, high-tech, electromagnetic Hyper Velocity Projectile, initially developed as a Navy weapon, an effort to fast-track increasing lethal and effective weapons to warzones and key strategic locations, Pentagon officials said.
>
> Overall, the Pentagon is accelerating developmental testing of its high-tech, long-range Electro-Magnetic Rail Gun by expanding the platforms from which it might fire and potentially postponing an upcoming at-sea demonstration of the weapon, Pentagon and Navy officials told Scout Warrior.
>
> While initially conceived of and developed for the Navy's emerging Rail Gun Weapon, the Pentagon and Army are now firing the Hyper Velocity Projectile from an Army Howitzer in order to potential harness near-term weapons ability, increase the scope, lethality and range ability to accelerate combat deployment of the lethal, high-speed round.[65]

Indirectly Improving Ability to Counter ASCMs and ASBMs

As discussed earlier, SSLs currently under development have enough beam power to counter small boats and UAVs, but not enough to counter ASCMs or ASBMs. Even so, such SSLs could indirectly improve a ship's ability to counter ASCMs and ASBMs by permitting the ship to use fewer of its SAMs for countering UAVs, and more of them for countering ASCMs and ASBMs. Similarly, even though HVPs fired from 5-inch powder guns might not be able to counter ASBMs, they could indirectly improve a ship's ability to counter ASBMs by permitting the ship to use fewer of its SAMs for countering ASCMs and more of its SAMs for countering ASBMs.

Remaining Development Challenges

Although the Navy in recent years has made considerable progress in developing SSLs, EMRG, and HVP, a number of significant development challenges remain. Overcoming these challenges will likely require years of additional development work, and ultimate success in overcoming them is not guaranteed.[66]

---

[64] Tony Bertuca, "DOD's New Hypervelocity Gun Technology Emerging As Key BMD Capability," *Inside the Navy*, September 19, 2016.

[65] Kris Osborn, "Pentagon to Accelerate Rail Gun Hypervelocity Projectile—Fires From Army Howitzer," *Scout Warrior*, May 19, 2017.

[66] Laser skeptics sometimes note that laser proponents over the years have made numerous predictions about when lasers might enter service with DOD, and that these predictions repeatedly have not come to pass. Viewing this record of unfulfilled predictions, skeptics might argue that "lasers are X years in the future—and always will be." Laser proponents acknowledge the record of past unfulfilled predictions, but argue that the situation has now changed because of rapid advancements in SSL technology and a shift from earlier ambitious goals (such as developing megawatt-power lasers for countering targets at tens or hundreds of miles) to more realistic goals (such as developing kilowatt-power lasers for countering targets at no more than a few miles). Laser proponents might argue that laser skeptics are vulnerable to what might be called cold plate syndrome (i.e., a cat that sits on a hot plate will not sit on a hot plate again—but it will not sit on a cold plate, either).

SSLs

As shown in **Figure 14**, remaining development challenges for SSLs include, among other things, making the system rugged enough for extended shipboard use, making the beam director (the telescope-like part of the laser that sends the beam toward the target) suitable for use in a marine environment (where moisture and salt in the air can be harsh on equipment), and integrating the system into the ship's electrical power system and combat system.

Figure 14. Development Challenges for SSLs

As of February 2013

Source: Slide from Navy briefing entitled "Navy Solid State Laser Program Overview," ASNE Day 2013, Mr. Peter "Rollie" Morrison, ONR 35 S&T Program Office, February 22, 2013, accessed August 13, 2015, at https://www.navalengineers.org/ProceedingsDocs/ASNEDay2013/Morrison_Pres.pdf.

A January 23, 2015, blog post co-authored by the Office of Naval Research's program officer for the Navy's SSL program states:

> In the near term, many challenges remain to develop and operate high-energy laser systems in the maritime environment that are unique to the Navy and Marine Corps. Among these challenges is dealing with the heat generated as power levels increase. A second issue is packing sufficient power on the platform, which will require advanced battery, generator, power conditioning, and hybrid energy technologies. Current laser technologies are approximately 30 percent electrically efficient. Corrosion and contamination of optical windows by shipboard salt spray, dirt, and grime also are technical challenges. In addition, atmospheric turbulence resulting from shifting weather conditions, moisture, and dust is problematic. Turbulence can cause the air over long

> distances to act like a lens, resulting in the laser beam's diffusing and distorting, which degrades its performance.
>
> Much progress has been made in demonstrating high-energy laser weapon systems in the maritime environment, but there is still much to be done. Additional advances will be required to scale power levels to the hundreds of kilowatts that will make high[-]energy lasers systems robust, reliable, and affordable. Higher power levels are important for the ability to engage more challenging threats and improve the rate and range at which targets can be engaged.
>
> The programs managed by ONR are addressing these remaining issues while positioning this important warfighting capability toward an acquisition program and eventual deployment with the fleet and force.[67]

EMRG and HVP

As shown in **Figure 15**, remaining development challenges for EMRG involve items relating to the gun itself (including increasing barrel life to desired levels), the projectile, the weapon's electrical power system, and the weapon's integration with the ship. Fielding HVP on cruisers and destroyers equipped with 5-inch and 155mm powder guns would additionally require HVP to be integrated with the combat systems of those ships.

The Navy states:

> The EMRG effort began in FY 2005 with a focus on the barrel, power storage, and rail technology. In 2015, the Navy is testing full-scale industry advanced composite launchers for structure strength and manufacturability, and has advanced the pulsed-power system design from single-shot to actively cooled repeated rate operations. Building on the success of the first phase, the second phase started in 2012 with a focus on developing equipment and techniques to fire ten rounds per minute. Thermal-management techniques required for sustained firing rates are in development for both the launcher system and the pulsed-power system. The Office of Naval Research will develop a tactical prototype EMRG launcher and pulsed-power architecture suitable for advanced testing both afloat and ashore. Railgun demonstration has been funded to occur in FY 2016.[68]

A June 2015 press report states:

> As the Navy prepares to test its electromagnetic railgun at sea for the first time in 2016, service leaders said one of the biggest challenges will be integrating the new technology onto existing platforms.....
>
> [Vice Adm. William Hilarides, commander of Naval Sea Systems Command] said he is positive the Navy will successfully demonstrate the weapon's ability to fire from the Trenton, but one of the biggest challenges will be configuring the railgun so that it fits within the power structure of other existing platforms.
>
> "Those are not 600-ton margin ships," he said [meaning ships with 600 tons of growth margin available to accommodate EMRG]. "If they have 60 tons, if they have 16 tons, then we'll be talking about what do we take off our existing destroyers, cruisers and other ships in order to get this incredible capability [on them]."

---

[67] Peter Morrison and Dennis Sorenson, "Developing a High-Energy Laser for the Navy," Future Force, January 23, 2015, accessed August 13, 2015, at http://futureforce.navylive.dodlive.mil/2015/01/high-energy-laser/. The authors are identified at the end of the post as follows: "Peter Morrison is the Office of Naval Research's program officer for the Navy's Solid-State Laser program. Dennis Sorenson is a contractor with the Office of Naval Research."

[68] U.S. Navy, *U.S. Navy Program Guide 2015*, p. 169.

> These types of discussions are influencing ship designs as program managers look at what systems are indispensable and what can be exchanged, Hilarides said.
>
> Integrating the railgun into the fleet won't be a swift process.
>
> It will be at least 10 years until the railgun is fielded on new ships and potentially 30 years past that before the Navy considers removing powder guns from the fleet entirely and transitioning to energy weapons alone, according to Hilarides.[69]

Figure 15. Development Challenges for EMRG

As of May 2014

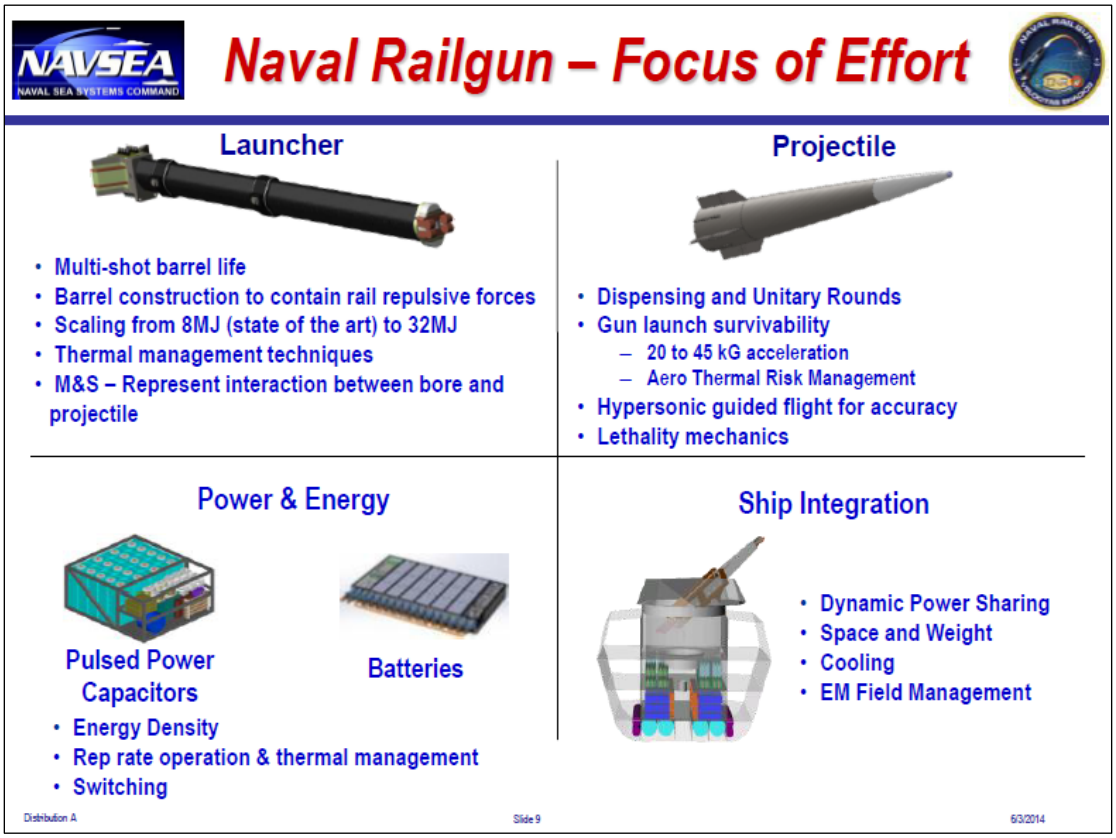

Source: Slide 9 from Navy briefing entitled "Electromagnetic Railgun," NDIA Joint Armaments Forum, Exhibition & Technology Demonstration, May 14, 2014, LCDR Jason Fox, USN, Assistant PM [Program Manager], Railgun Ship Integration, Distribution A, Approved for Public Release, accessed August 13, 2015, at http://www.dtic.mil/ndia/2014armaments/WedFox.pdf.

A May 19, 2017, press report states:

> Consider 35 pounds of metal moving at Mach 5.8. Ten shots per minute. 1,000 shots before the barrel wears out under the enormous pressures. That's the devastating firepower the Navy railgun program aims to deliver in the next two years, and they're well on their way.
>
> "We continue to make great technical progress," said Office of Naval Research program manager Tom Boucher. Boucher and an aide briefed me in the blazing hot courtyard of

[69] Allyson Versprille, "Integration Biggest Challenge for Railgun," *National Defense*, June 2015. See also Lance M. Bacon, "3-Star: 'Lot of Work' Before Railgun Arrives in Fleet," *Navy Times*, February 5, 2015.

> the Pentagon, which was hosting the annual DoD Lab Day — a kind of military-grade science fair.
>
> Three years ago, then-Chief of Naval Operations Jonathan Greenert declared that railguns — which fire projectiles with electromagnetic pulses rather than gunpowder — had come so close to battle-ready that he wanted to test-fire one at sea. Since then the Navy has changed course, deciding that permanent land-based test sites would provide more and better data for fewer dollars than an ad hoc installation aboard a repurposed fast transport (variously known as JHSV or EFP). So on November 17, along the Potomac River at the Naval Surface Warfare Center in Dahlgren, Va., a new 32-megajoule railgun built by BAE Systems opened fire for the first time.... A second railgun is being set up at the Army's White Sands Missile Range in the New Mexico desert, where there's enough wide-open space to fire the weapon at its maximum range of more than a hundred nautical miles.
>
> While White Sands tests the long-range performance of the projectile, Dahlgren will work on the weapon itself. Previous test weapons were like medieval bombards, firing just a few times per day. The Dahlgren team is now making multiple shots per hour as they work out the bugs, and by the end of the year they expect to reach the goal of 10 shots per minute.
>
> Once they've reached the 10-round a minute rate, Dahlgren will switch focus to barrel life. A decade ago, experimental railguns often wore out their barrel with a single shot. With new materials better able to endure the intense stresses, the barrels on the current test weapons can last for hundreds of shots before requiring replacement — roughly how long a battleship's 16″ barrels lasted back in World War II. The goal is a barrel that lasts 1,000 rounds.[70]

Transitioning from Development to Procurement

Transitioning military technology efforts from the research and development phase to the procurement phase can sometimes be a challenge. Some military technology efforts fail to make the transition, falling into what observers sometimes refer to as the "valley of death" between research and development and procurement. A February 27, 2017, press report states that

> The Navy has established programs for high-energy lasers and the electromagnetic railgun at Naval Sea Systems Command acquisition directorates, paving the way for technologies that have long been stuck in research and development to potentially be installed on the service's ships one day.
>
> The program executive office for integrated warfare systems (PEO IWS) is developing acquisition plans for lasers and the electromagnetic railgun, as well as the railgun's associated weapon, the hypervelocity projectile, according to NAVSEA spokeswoman Christianne Witten.
>
> Last August, a "Directed Energy Program Office" was set up at the above-water sensors directorate within PEO IWS, Witten wrote in a Feb. 22 email. The new office was established to "accelerate the fielding of High Energy Laser (HEL) weapon systems to the fleet," according to the spokeswoman.
>
> Additionally, last June, the Navy's acquisition executive charged the surface-ship weapons program office at PEO IWS with developing an acquisition and fielding plan for the railgun and the hypervelocity projectile, Witten said.[71]

[70] Sydney J. Freedberg Jr., "Navy Railgun Ramps Up in Test Shots," *Breaking Defense*, May 19, 2017.

[71] Justin Doubleday, "Laser, Railgun Programs Transitioned to Navy Acquisition Offices," *Inside the Navy*, February (continued...)

Issues for Congress

Potential Oversight Questions

Potential oversight questions for Congress regarding Navy programs for SSLs, EMRG, and HVP include the following:

- Using currently available approaches for countering ASCMs and ASBMs, how well could Navy surface ships defend themselves in a combat scenario against an adversary such as China that has large numbers of ASCMs (including advanced models) and ASBMs? How would this change if Navy surface ships in coming years were equipped with SSLs, EMRG, HVP, or some combination of these systems?
- How significant are the remaining development challenges for SSLs, EMRG, and HVP?
- Are current schedules for developing SSLs, EMRG, and HVP appropriate in relation to remaining development challenges and projected improvements in enemy ASCMs and ASBMs? To what degree are current schedules for developing SSLs, EMRG, or HVP sensitive to annual funding levels?
- When does the Navy anticipate issuing roadmaps detailing its plans for procuring and installing production versions of SSLs, EMRGs, and HVP on specific Navy ships by specific dates?
- Will the kinds of surface ships that the Navy plans to procure in coming years have sufficient space, weight, electrical power, and cooling capability to take full advantage of SSLs (particularly those with beam powers above 200 kW) and EMRG? What changes, if any, would need to be made in Navy plans for procuring large surface combatants (i.e., destroyers and cruisers) or other Navy ships to take full advantage of SSLs and EMRG?
- Are the funding sources for SSLs, EMRG, and HVP in Navy and Defense-Wide research and development accounts (see "Summary of Congressional Action on FY2018 Funding" below) sufficiently visible for supporting congressional oversight?

Legislative Activity for FY2018

Summary of Congressional Action on FY2018 Funding

Funding in the defense budget for research and development work on Navy SSLs, EMRG, and HVP is spread across several research and development account line items (which are known as program elements, or PEs). The PEs shown in **Table 1** capture much but not necessarily all of the funding for developing Navy SSLs, EMRG, and HVP. Moreover, the PEs shown in the table (particularly the final line in the table, showing the defense-wide PE for Advanced Innovative Technology), include funding for efforts other than Navy SSLs, EMRG, and HVP, so

(...continued)

27, 2017.

congressional changes from requested amounts might or might not relate to SSLs, EMRG, or HVP.

Table 1. Summary of Congressional Action on FY2018 Funding

In millions of dollars, rounded to nearest tenth

Program Element (PE) number, PE name, budget line number	Req.	Authorization			Appropriation		
		HASC	SASC	Conf.	HAC	SAC	Conf.
0602114N, Power Projection Applied Research, line 4	13.6	13.6	13.6	13.6	13.6		
0602750N, Future Naval Capabilities Applied Research, line 13	156.8	156.8	156.8	156.8	149.8		
0602792N, Innovative Navy Prototypes Applied Research, line 15	171.1	171.1	161.1	164.1	164.1		
0603673N, Future Naval Capabilities Advanced Technology Development, line 23	231.8	231.8	226.8	229.0	205.6		
0603758N, Navy Warfighting Experimentation and Demonstration, line 27	64.9	64.9	64.9	64.9	64.9		
0603801N, Innovative Naval Prototypes Advanced Technology Development, line 29	108.3	132.3	123.3	133.3	108.3		
0603795N, Land Attack Technology, line 75	33.6	33.6	33.6	33.6	33.6		
0603925N, Directed Energy and Electric Weapon System, line 78	107.3	133.3	107.3	122.3	93.4		
0604250D8Z, Advanced Innovative Technology, line 97	1,482.5	1,460.5	1,482.5	1,460.5	1,005.8		

Source: Table prepared by CRS based on Navy FY2018 budget submission and committee and conference reports on FY2018 National Defense Authorization Act and FY2018 DOD Appropriations Act.

Notes: HASC is House Armed Services Committee; **SASC** is Senate Armed Services Committee; **HAC** is House Appropriations Committee; **SAC** is Senate Appropriations Committee; **Conf.** is conference agreement. The PEs shown in the table below capture much but not necessarily all of the funding for work on Navy SSLs, EMRG, and HVP. The PEs shown in the table, moreover, include funding for efforts other than Navy SSLs, EMRG, and HVP.

FY2018 National Defense Authorization Act (H.R. 2810/S. 1519)

House

The House Armed Services Committee, in its report (H.Rept. 115-200 of July 6, 2017) on H.R. 2810, as revised in the conference report (H.Rept. 115-404 of November 9, 2017) on H.R. 2810, recommended the funding levels shown in the HASC column of **Table 1**. The recommended increases of $24 million for PE 0603801N (line 29) and $26 million for PE 0603925N (line 78) are for "Program increase for railgun tactical demonstrator." (Pages 431 and 432) The recommended reduction of $22 million for PE 0604250D8Z is for "Program decrease." (Page 453)

Senate

The Senate Armed Services Committee, in its report (S.Rept. 115-125 of July 10, 2017) on S. 1519, as revised in the conference report (H.Rept. 115-404 of November 9, 2017) on H.R. 2810,

recommended the funding levels shown in the SASC column of **Table 1**. The recommended reduction of $10 million for PE 0602792N (line 15) is for "General decrease." (Page 450) The recommended decrease of $5 million for PE 0603673N (line 23) is for "Capable manpower, enterprise and platform enablers." (Page 451) The recommended increase of $15 million for PE 0603801N (line 29) is for "Underwater unmanned vehicle prototypes." (Page 451)

Section 219 of S. 1519 as reported states:

> SEC. 219. Department of Defense directed energy weapon system prototyping and demonstration program.
>
> (a) Establishment.—The Secretary of Defense, acting through the Under Secretary, shall establish a program on the prototyping and demonstration of directed energy weapon systems to build and maintain the military superiority of the United States by—
>
> (1) accelerating the fielding of directed energy weapon systems that would help counter technological advantages of potential adversaries of the United States; and
>
> (2) supporting the military departments, the combatant commanders, the United States Special Operations Command, and the Missile Defense Agency in developing prototypes and demonstrating operational utility of high energy lasers and high powered microwave weapon systems.
>
> (b) Guidelines.—
>
> (1) IN GENERAL.—Not later than 180 days after the date of the enactment of this Act, the Under Secretary shall issue guidelines for the operation of the program established under subsection (a), including—
>
> (A) criteria for an application for funding by a military department, defense agency, or a combatant command;
>
> (B) the priorities, if any, to be provided to field directed energy weapon system technologies developed by research funding of the Department or industry; and
>
> (C) criteria for evaluation of an application for funding or changes to policies or acquisition and business practices by such a department, agency, or command for purposes of improving the effectiveness and efficiency of the Program.
>
> (2) LIMITATION.—Funding for a military department, defense agency, or combatant command under the program established under subsection (a) may only be available for advanced technology development, prototyping, and demonstrations in which the Department of Defense maintains management of the technical baseline and a primary emphasis on technology transition and evaluating military utility to enhance the likelihood that the particular directed energy weapon system will meet the Department end user's need.
>
> (c) Applications for funding.—
>
> (1) IN GENERAL.—Not less frequently than once each year, the Under Secretary shall solicit from the heads of the military departments, the defense agencies, and the combatant commands applications for funding under the program established under subsection (a) to be used to enter into contracts, cooperative agreements, or other transaction agreements entered into pursuant to section 2371b of title 10, United States Code, with appropriate entities for the fielding or commercialization of technologies.
>
> (2) TREATMENT PURSUANT TO CERTAIN CONGRESSIONAL RULES.—Nothing in this section shall be construed to require any official of the Department of Defense to provide funding under the program to any congressional earmark as defined pursuant to clause 9 of rule XXI of the Rules of the House of Representatives or any congressionally

directed spending item as defined pursuant to paragraph 5 of rule XLIV of the Standing Rules of the Senate.

(d) Funding.—

(1) IN GENERAL.—Except as provided in paragraph (2) and subject to the availability of appropriations for such purpose, of the funds authorized to be appropriated by this Act or otherwise made available for fiscal year 2018 for research, development, test, and evaluation, defense-wide, $200,000,000 shall be available to the Under Secretary to allocate to the military departments, the defense agencies, and the combatant commands to carry out the program established under subsection (a).

(2) LIMITATION.—Not more than half of the amounts made available under paragraph (1) may be allocated as described in such paragraph until the Under Secretary—

(A) develops the strategic plan required by section 219(a)(2)(A) of the National Defense Authorization Act for Fiscal Year 2017 (Public Law 114–328; 10 U.S.C. 2431 note); and

(B) submits such strategic plan to the congressional defense committees.

(e) Designation of Under Secretary of Defense for Research and Engineering as the official with principal responsibility for development and demonstration of directed energy weapons.—Section 219(a)(1) of the National Defense Authorization Act for Fiscal Year 2017 (Public Law 114–328; 10 U.S.C. 2431 note) is amended by striking "Not later" and all that follows through "of Defense" and inserting "The Under Secretary of Defense for Research and Engineering shall serve".

(f) Under Secretary defined.—In this section, the term "Under Secretary" means the Under Secretary of Defense for Research and Engineering in the Under Secretary's capacity as the official with principal responsibility for the development and demonstration of directed energy weapons pursuant to section 219(a)(1) of such Act (Public Law 114–328; 10 U.S.C. 2431 note), as amended by subsection (e).

Regarding Section 219, S.Rept. 115-125 states:

Department of Defense directed energy weapon system prototyping and demonstration program (sec. 219)

The committee recommends a provision that would designate the Under Secretary of Defense for Research and Engineering as the official with principal responsibility for development and demonstration of directed energy weapons, pursuant to section 219(a)(1) of the National Defense Authorization Act for Fiscal Year 2017 (Public Law 114–328). The recommended provision would also establish an initiative within the Department of Defense to accelerate the fielding of directed energy weapon systems that would help counter technological advance of potential adversaries of the United States.

The committee remains supportive of directed energy weapon systems and believes that directed energy can fundamentally change warfare, much like precision-guided weapons did. The committee notes that, since 1960, the Department of Defense has invested more than $6.0 billion in directed energy science and technology initiatives but has limited operational systems to date. While the committee commends the Department for recognizing the potential of directed energy weapon systems by budgeting for the rapid procurement of five high-energy laser weapon systems to be deployed in an operational environment, it continues to urge the Department to resource directed energy initiatives at levels necessary to transition them to full-scale acquisition programs.

The committee realizes that directed energy weapons systems will not replace kinetic weapon systems nor are they an all-purpose solution to every warfighting scenario. However, there are specific scenarios today in which directed energy weapon systems can, and should, provide our military with tactical and strategic advantages. Counter-Rockets, Artillery, and Mortar (C–RAM) and Counter-Un manned Aerial Systems (UAS)

are specific missions in which directed energy could provide solutions to capability gaps of the military.

A number of directed energy weapon systems have been developed but are awaiting funds in the out-years for testing and demonstration. While additional improvements can be made in the areas of size, weight, and power, the committee believes that many of the systems are fully capable now of providing our military with game-changing capabilities.

The recommended provision would authorize $200.0 million for the Under Secretary for Research and Engineering to be used exclusively for high energy laser and high power microwave prototyping and demonstrations. As the senior official with principal responsibility for directed energy weapons, the Under Secretary for Research and Engineering would be entrusted with issuing guidelines for the operation of the program based on specific criteria limited to advanced technology development, prototyping, and demonstrations. The committee urges the Under Secretary to place increased priority on funding directed energy programs identified as unfunded priorities by the Services.

The provision would also withhold 50 percent of the authorized funds until the Under Secretary develops the strategic plan required by section 219(a)(2)(A) of the National Defense Authorization Act for Fiscal Year 2017 (Public Law 114–328; 10 U.S.C. 2431 note) and submits the strategic plan to the congressional defense committees.

Finally, the committee expects the Department to maintain management of the technical baseline with a primary emphasis on technology transition and evaluating military utility to enhance the likelihood that particular directed energy weapon systems will meet the Department end user's need. The committee encourages the Department, under the program, to develop the tactics, techniques, and procedures for the weapon systems and engage the warfighter in the use of operational systems and produce military utility assessments.

The committee expects that the Under Secretary will keep the congressional defense committees regularly updated on the progress of activities regarding directed energy weapon systems prototyping and demonstration. (Pages 45-46)

S.Rept. 115-125 also states:

Joint directed energy test center

The committee notes that next generation weapon systems are being developed by the Department of Defense and industry, but the nation's infrastructure for testing those weapon systems is antiquated and in need of modernization. The Department of Defense established the nation's first High Energy Laser System Test Facility (HELSTF) in 1975, but the technology has seen significant advancements over the course of four decades. As directed energy weapon systems mature, the need to validate their performance becomes increasingly important.

The committee applauds the Air Force for proposing a Joint Directed Energy Test Center, which could potentially concentrate government expertise and reduce duplication of effort across the Department of Defense in order to support more rapid and cost effective testing and fielding of directed energy weapon systems. The committee believes that doing so could also allow the broad, standardized collection and evaluation of data to establish test references and support policy decisions in a more reliable fashion.

The committee is aware that the Test Resource Management Center and the High Energy Laser Joint Technology Office produced a report in 2009 recommending funding over the future years defense program to develop and maintain adequate personnel, resources, and facilities to test current and future high energy laser systems. Despite these recommendations, the Department has submitted budget requests that have resulted in a 75 percent cut in budget and personnel at HELSTF. With this in mind, the committee directs the Director of Operational Testing and Evaluation to review and update the 2009

> report and to identify infrastructure and personnel needs at HELSTF to accommodate the growth and maturity of directed energy weapon systems across the military services. The Director should consult with the services and reference the Air Force Directed Energy Flight Plan when updating the report. The committee directs the Department to submit and brief the updated to the defense committees on the updated report within 90 days. (Pages 82-83)

S.Rept. 115-125 also states:

> **Review of policies on use of directed energy weapon systems**
>
> The committee notes that Department of Defense policies exist that limit the use of high energy lasers (HEL) and high power microwaves (HPM) in testing and in combat. While it is necessary to examine unintended consequences of potential weapon systems, current restrictions and approval processes for directed energy weapon systems may be overly burdensome and prevent the deployment and usage of those systems. The committee therefore directs the Department of Defense to identify policies that may hinder the approval process and usage of directed energy weapon systems, intentional and unintentional, and to propose possible remedies. The committee encourages the Department to place an emphasis on risk mitigation measures as opposed to risk avoidance when proposing solutions, similar to other weapon systems, and to brief the congressional defense committees on its findings. (Pages 87-88)

Conference

The conference report (H.Rept. 115-404 of November 9, 2017) on H.R. 2810 recommended the funding levels shown in the authorization conference column of **Table 1**. The recommended reduction of $7 million for PE 0602792N (line 15) is for "General decrease." The recommended reduction of $2.742 million for PE0603673N (line 23) is for "Capable manpower, enterprise and platform enablers." The recommended increase of $25 million for PE 0603801N (line 29) includes an increase of $10 million for "Program increase for railgun tactical demonstrator." (The remaining increase of $15 million is for "Underwater unmanned vehicle prototypes.") (Page 1182) The recommended increase of $15 million for PE 0603925N (line 78) is for "Program increase for railgun tactical demonstrator." (Page 1184) The recommended decrease of $22 million for PE 0604250D8Z (line 97) is for "Program decrease." (Page 1208)

Section 215 of the conference version of H.R. 2810 states:

> SEC. 215. Department of Defense directed energy weapon system prototyping and demonstration program.
>
> (a) Designation of Under Secretary of Defense for Research and Engineering as the official with principal responsibility for development and demonstration of directed energy weapons.—Subsection (a)(1) of section 219 of the National Defense Authorization Act for Fiscal Year 2017 (Public Law 114–328; 10 U.S.C. 2431 note) is amended by striking "Not later" and all that follows through "Department of Defense" and inserting "The Under Secretary of Defense for Research and Engineering shall serve".
>
> (b) Prototyping and demonstration program.—Such section is further amended by adding at the end the following new subsection:
>
> "(c) Prototyping and demonstration program.—
>
> "(1) ESTABLISHMENT.—The Secretary of Defense, acting through the Under Secretary, shall establish a program on the prototyping and demonstration of directed energy weapon systems to build and maintain the military superiority of the United States by—

"(A) accelerating, when feasible, the fielding of directed energy weapon prototypes that would help counter technological advantages of potential adversaries of the United States; and

"(B) supporting the military departments, the combatant commanders, and other relevant defense agencies and entities in developing prototypes and demonstrating operational utility of high energy lasers and high powered microwave weapon systems.

"(2) GUIDELINES.— (A) Not later than 180 days after the date of the enactment of the National Defense Authorization Act for Fiscal Year 2018, the Under Secretary shall issue guidelines for the operation of the program established under paragraph (1), including the following:

"(i) Criteria required for an application for funding by a military department, defense agency or entity, or a combatant command.

"(ii) The priorities, based on validated requirements or capability gaps, for fielding prototype directed energy weapon system technologies developed by research funding of the Department or industry.

"(iii) Criteria for evaluation of an application for funding or changes to policies or acquisition and business practices by such a department, agency, or command for purposes of improving the effectiveness and efficiency of the program.

"(B) Funding for a military department, defense agency, or combatant command under the program established under paragraph (1) may only be available for advanced technology development, prototyping, and demonstrations in which the Department of Defense maintains management of the technical baseline and a primary emphasis on technology transition and evaluating military utility to enhance the likelihood that the particular directed energy weapon system will meet the Department end user's need.

"(3) APPLICATIONS FOR FUNDING.— (A) Not less frequently than once each year, the Under Secretary shall solicit from the heads of the military departments, the defense agencies, and the combatant commands applications for funding under the program established under paragraph (1) to be used to enter into contracts, cooperative agreements, or other transaction agreements entered into pursuant to section 2371b of title 10, United States Code, with appropriate entities for the prototyping or commercialization of technologies.

"(B) Nothing in this section shall be construed to require any official of the Department of Defense to provide funding under the program to any congressional earmark as defined pursuant to clause 9 of rule XXI of the Rules of the House of Representatives or any congressionally directed spending item as defined pursuant to paragraph 5 of rule XLIV of the Standing Rules of the Senate.

"(4) FUNDING.— (A) Except as provided in subparagraph (B) and subject to the availability of appropriations for such purpose, of the funds authorized to be appropriated by the National Defense Authorization Act for Fiscal Year 2018 or otherwise made available for fiscal year 2018 for research, development, test, and evaluation, defense-wide, up to $100,000,000 may be available to the Under Secretary to allocate to the military departments, the defense agencies, and the combatant commands to carry out the program established under paragraph (1).

"(B) Not more than half of the amounts made available under subparagraph (A) may be allocated as described in such paragraph until the Under Secretary—

"(i) develops the strategic plan required by subsection (a)(2)(A); and

"(ii) submits such strategic plan to the congressional defense committees.

> "(5) UNDER SECRETARY DEFINED.—In this subsection, the term 'Under Secretary' means the Under Secretary of Defense for Research and Engineering in the Under Secretary's capacity as the official with principal responsibility for the development and demonstration of directed energy weapons pursuant to subsection (a)(1).".

Regarding Section 215, H.Rept. 115-404 states:

> *Department of Defense directed energy weapon system prototyping and demonstration program (sec. 215)*
>
> The Senate amendment contained a provision (sec. 219) that would designate the Under Secretary of Defense for Research and Engineering as the official with principal responsibility for development and demonstration of directed energy weapons, pursuant to section 219(a)(1) of the National Defense Authorization Act for Fiscal Year 2017 (Public Law 114–328). The provision would also authorize funds to be used exclusively for high energy laser and high power microwave prototyping and demonstrations, but withhold 50 percent of those funds until the Under Secretary develops and submits to Congress a strategic plan.
>
> The House bill contained no similar provision.
>
> The House recedes with an amendment that would make technical, clarifying changes to the provision. (Page 777)

FY2018 DOD Appropriations Act (Division A of H.R. 3219)

House

H.R. 3219 as reported by the House Appropriations Committee (H.Rept. 115-219 of July 13, 2017) was the FY2018 DOD Appropriations Act. H.R. 3219 as passed by the House is called the Make America Secure Appropriations Act, 2018. H.R. 3219 as passed by the House includes the FY2018 DOD Appropriations Act as Division A and four other appropriations acts as Divisions B through E. The discussion below relates to Division A.

The House Appropriations Committee, in its report (H.Rept. 115-219 of July 13, 2017) on H.R. 3219, recommended the funding levels shown in the HAC column of **Table 1**. The recommended reduction of $6.969 million for PE 0602750N (line 13) includes a reduction of $1.626 million for "Capable manpower project delay" and a reduction of $5.343 million for "Sea shield previously funded efforts." (Page 238) The recommended reduction of $7 million for PE 0602792N (line 15) is for "Cyber excess growth." (Page 238)

The recommended reduction of $26.212 million for PE 0603673N (line 23) includes a reduction of $2.742 million for "Capable manpower project delay," a reduction of $2.728 million for "Force health protection previously funded efforts," a reduction of $4.110 million for "Forcenet previously funded efforts," a reduction of $3.954 million for "Power and energy previously funded efforts," a reduction of $8.568 million for "Sea shield previously funded efforts," and a reduction of $4.110 million for "Sea strike previously funded efforts." (Page 238)

The recommended reduction of $13.879 million for PE 0603925N (line 78) includes a reduction of $3.610 million for SNLWS [Surface Navy Laser Weapon System] development long lead items early to need," a reduction of $1.493 million for "SNLWS government and support engineering services test and evaluation early to need," and a reduction of $8.776 million for "Solid state laser lower power module development excess growth." (Page 240)

The recommended reduction of $170 million to PE 0604250D8Z (line 97) is for "Program decrease—excess growth." (Page 270)

House Floor Action

On July 27, 2017, as part of its consideration of H.R. 3219, the House agreed to by voice vote H.Amdt. 258, an en bloc amendment that included, inter alia, amendment 52 as printed in H.Rept. 115-261 of July 26, 2017, on H.Res. 478, providing for the further consideration of H.R. 3219. As summarized in H.Rept. 115-261, amendment 52 "Supports the next phase of electromagnetic railgun development to bring the system closer to successful installation within the fleet." (Page 8)

Appendix. Potential Advantages and Limitations of Shipboard Lasers

This appendix presents additional information on potential advantages and limitations of shipboard lasers.

Potential Advantages

In addition to a low marginal cost per shot and deep magazine, potential advantages of shipboard lasers include the following:

- **Fast engagement times.** Light from a laser beam can reach a target almost instantly (eliminating the need to calculate an intercept course, as there is with interceptor missiles) and, by remaining focused on a particular spot on the target, cause disabling damage to the target within seconds. After disabling one target, a laser can be redirected in several seconds to another target.
- **Ability to counter radically maneuvering missiles.** Lasers can follow and maintain their beam on radically maneuvering missiles that might stress the maneuvering capabilities of Navy SAMs.
- **Precision engagements.** Lasers are precision-engagement weapons—the light spot from a laser, which might be several inches in diameter, affects what it hits, while generally not affecting (at least not directly) separate nearby objects.
- **Graduated responses.** Lasers can perform functions other than destroying targets, including detecting and monitoring targets and producing nonlethal effects, including reversible jamming of electro-optic (EO) sensors. Lasers offer the potential for graduated responses that range from warning targets to reversibly jamming their systems, to causing limited but not disabling damage (as a further warning), and then finally causing disabling damage.

Potential Limitations

Potential limitations of shipboard lasers include the following:

- **Line of sight.** Since laser light tends to fly through the atmosphere on an essentially straight path, shipboard lasers would be limited to line-of-sight engagements, and consequently could not counter over-the-horizon targets or targets that are obscured by intervening objects. This limits in particular potential engagement ranges against small boats, which can be obscured by higher waves, or low-flying targets. Even so, lasers can rapidly reacquire boats obscured by periodic swells.
- **Atmospheric absorption, scattering, and turbulence.** Substances in the atmosphere—particularly water vapor, but also things such as sand, dust, salt particles, smoke, and other air pollution—absorb and scatter light from a shipboard laser, and atmospheric turbulence can defocus a laser beam. These effects can reduce the effective range of a laser. Absorption by water vapor is a particular consideration for shipboard lasers because marine environments feature substantial amounts of water vapor in the air. There are certain wavelengths of light (i.e., “sweet spots” in the electromagnetic spectrum) where atmospheric absorption by water vapor is markedly reduced. Lasers can be

designed to emit light at or near those sweet spots, so as to maximize their potential effectiveness. Absorption generally grows with distance to target, making it in general less of a potential problem for short-range operations than for longer-range operations. Adaptive optics, which make rapid, fine adjustments to a laser beam on a continuous basis in response to observed turbulence, can counteract the effects of atmospheric turbulence. Even so, lasers might not work well, or at all, in rain or fog, preventing lasers from being an all-weather solution.

- **Thermal blooming.** A laser that continues firing in the same exact direction for a certain amount of time can heat up the air it is passing through, which in turn can defocus the laser beam, reducing its ability to disable the intended target. This effect, called thermal blooming, can make lasers less effective for countering targets that are coming straight at the ship, on a constant bearing (i.e., "down-the-throat" shots). Other ship self-defense systems, such as interceptor missiles or a CIWS, might be more suitable for countering such targets. Most tests of laser systems have been against crossing targets rather than "down-the-throat" shots. In general, thermal blooming becomes more of a concern as the power of the laser beam increases.
- **Saturation attacks.** Since a laser can attack only one target at a time, requires several seconds to disable it, and several more seconds to be redirected to the next target, a laser can disable only so many targets within a given period of time. This places an upper limit on the ability of an individual laser to deal with saturation attacks—attacks by multiple weapons that approach the ship simultaneously or within a few seconds of one another. This limitation can be mitigated by installing more than one laser on the ship, similar to how the Navy installs multiple CIWS systems on certain ships.
- **Hardened targets and countermeasures.** Less-powerful lasers—that is, lasers with beam powers measured in kilowatts (kW) rather than megawatts (MW)—can have less effectiveness against targets that incorporate shielding, ablative material, or highly reflective surfaces, or that rotate rapidly (so that the laser spot does not remain continuously on a single location on the target's surface) or tumble. Small boats (or other units) could employ smoke or other obscurants to reduce their susceptibility to laser attack.[72] Measures such as these, however, can increase the cost and/or weight of a weapon, and obscurants could make it more difficult for small boat operators to see what is around them, reducing their ability to use their boats effectively.
- **Risk of collateral damage to aircraft, satellites, and human eyesight.** Since light from an upward-pointing laser that does not hit the target would continue flying upward in a straight line, it could pose a risk of causing unwanted collateral damage to aircraft and satellites. The light emitted by SSLs being developed by the Navy is of a frequency that can cause permanent damage to human eyesight, including blinding. Blinding can occur at ranges much greater than ranges for damaging targeted objects. Scattering of laser light off the target or off fog or particulates in the air can pose a risk to exposed eyes.[73]

[72] See, for example, "Kelsey D. Atherton, "China Plans To Defeat American Lasers With Smoke," *Popular Science*, May 3, 2016.

[73] The United States in 1995 ratified the 1980 Convention on Prohibitions or Restriction on the Use of Certain Conventional Weapons Which May be Deemed to be Excessively Injurious or to Have Indiscriminate Effects. An (continued...)

For additional background information on potential Navy shipboard SSLs, see CRS Report R41526, *Navy Shipboard Lasers for Surface, Air, and Missile Defense: Background and Issues for Congress*, by Ronald O'Rourke.

Author Contact Information

Ronald O'Rourke
Specialist in Naval Affairs
rorourke@crs.loc.gov, 7-7610

(...continued)

international review of the convention began in 1994 and concluded in May 1996 with the adoption of, among other things, a new Protocol IV on blinding laser weapons. The protocol prohibits the employment of lasers that are specifically designed to cause permanent blindness to the naked eye or to the eye with corrective eyesight devices. The United States ratified Protocol IV on December 23, 2008, and it entered into force for the United States on July 21, 2009. DOD views the protocol as fully consistent with DOD policy. DOD believes the lasers discussed in this report are consistent with DOD policy of prohibiting the use of lasers specifically designed to cause permanent blindness to the naked eye or to the eye with corrective eyesight devices. For further discussion, see Appendix I ("Protocol on Blinding Lasers") in CRS Report R41526, *Navy Shipboard Lasers for Surface, Air, and Missile Defense: Background and Issues for Congress*, by Ronald O'Rourke.